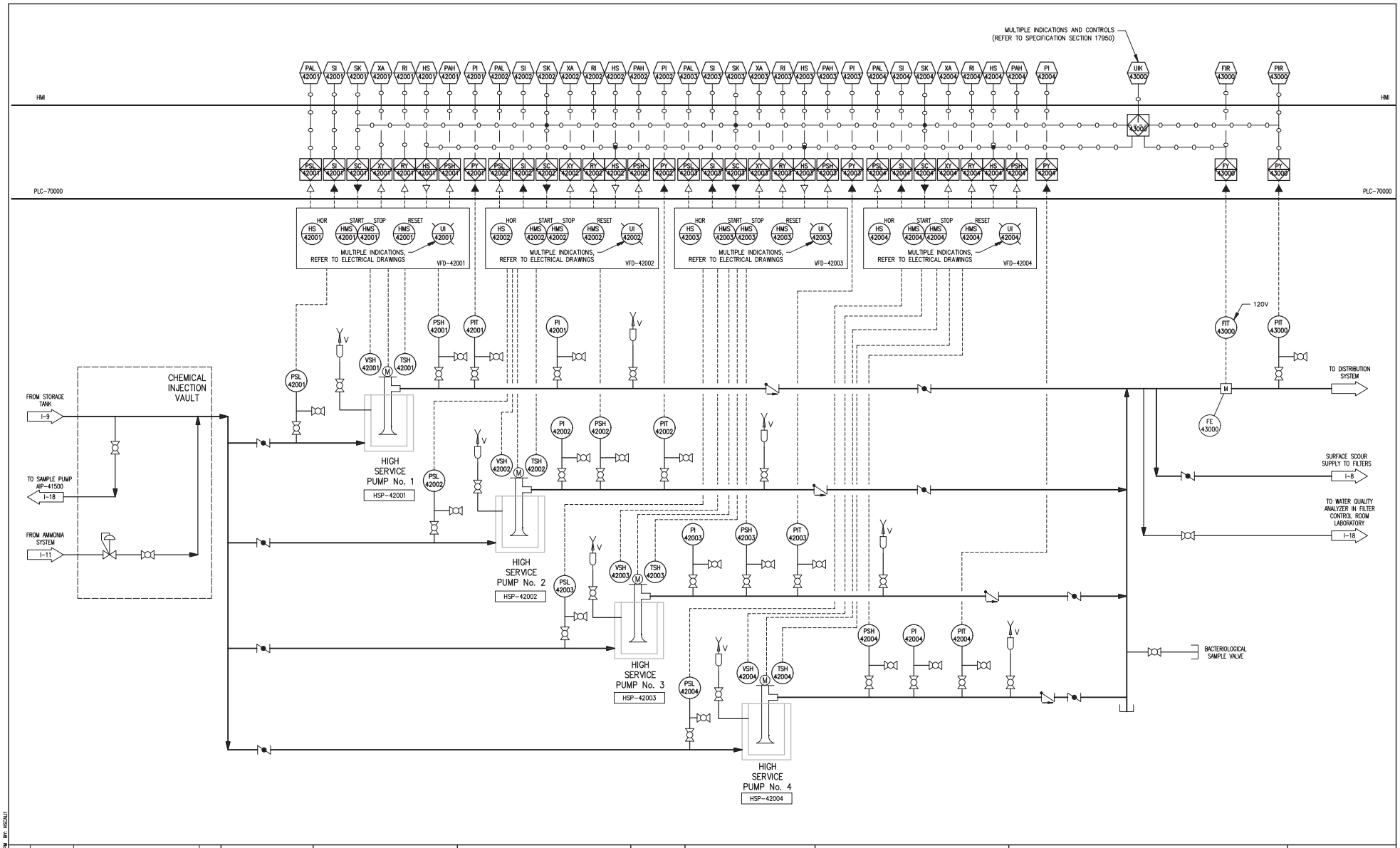

NO.	DATE	ISSUED FOR	BY

DESIGNED L.P.A.
DRAWN R.D.A.
CHECKED G.A.B.
PROJ. ENGR. G.A.B.

LUIS P. AMARAL P.E.
No. 47573

HAZEN AND SAWYER
Environmental Engineers & Scientists
4000 Hollywood Boulevard, Suite 750N
Hollywood, Florida 33021
Certificate of Authorization Number: 2771

SCALE N/A

CLIENTS PROJECT: –
ENGINEERS PROJECT: 44238-004
CAD REFERENCE: 44238-004BP3-I10

NORTH MIAMI FLORIDA
CITY OF NORTH MIAMI
PUBLIC WORKS UTILITIES

WINSON WATER TREATMENT PLANT
BID PACKAGE 3: WTP REHABILITATION
MASTER PUMP STATION
HIGH SERVICE PUMPS

DATE: JUNE 2014
SHEET: 225 OF 335
DRAWING: I-10

PERMITTING

PLOT DATE: 6/10/2014 3:50 PM BY: HSCALIT
XREFs= .\..\..\Tblock\44238-004-BP3-TB
File = H:\44238-004\Drawings\Bid Package 3 - WTP Rehab\Instrumentation\Bid Package 3 - WTP Rehab\PID DWG\44238-004BP3-I10 Saved by lamaral Save date = 6/9/2014 7:31 PM

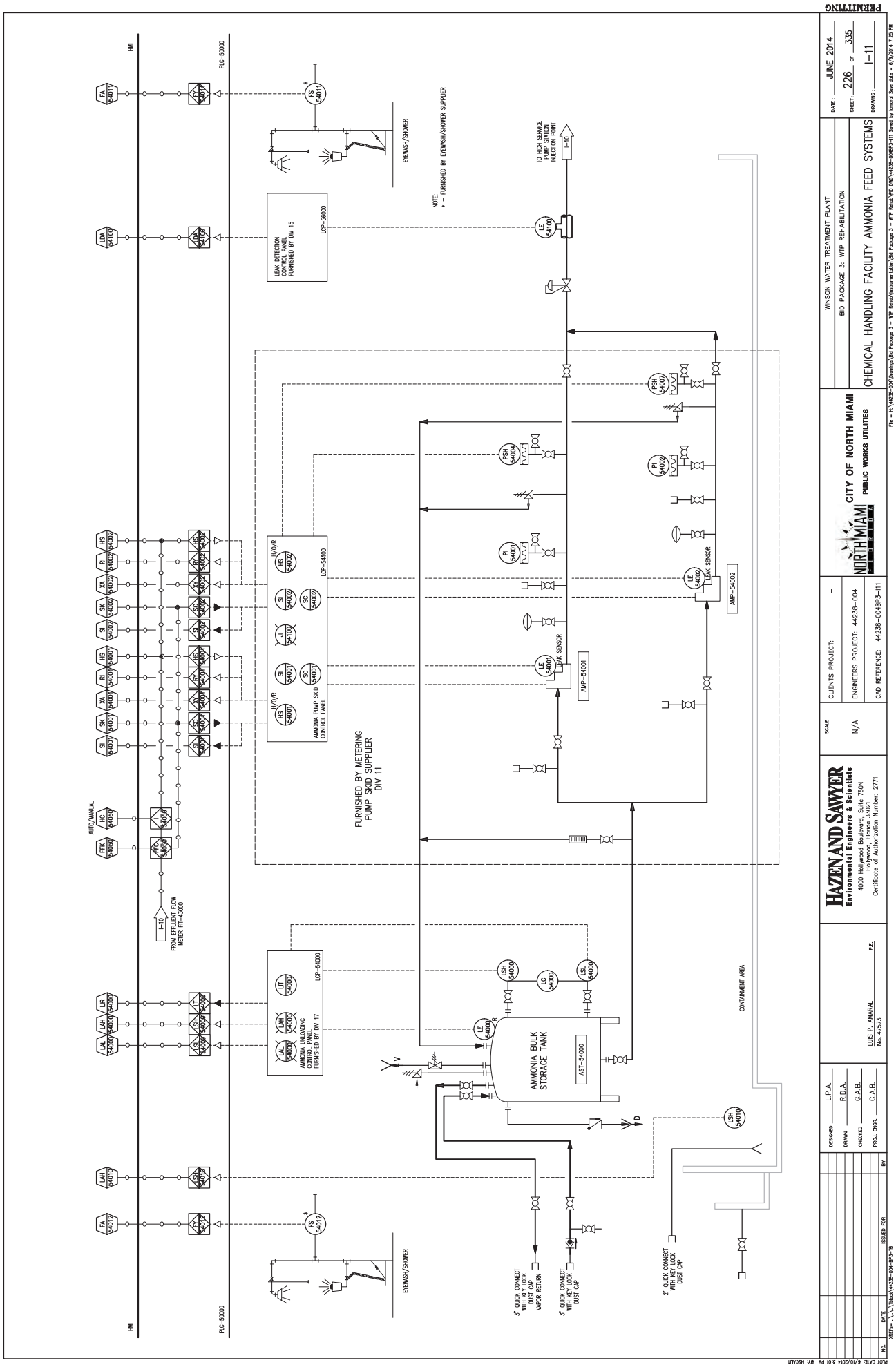
PERMITTING
WINSON WATER TREATMENT PLANT
BID PACKAGE 3: WTP REHABILITATION
CHEMICAL HANDLING FACILITY AMMONIA FEED SYSTEMS
DATE: JUNE 2014
SHEET: 226 OF 335
DRAWING: I-11
CITY OF NORTH MIAMI
PUBLIC WORKS UTILITIES
NORTH MIAMI FLORIDA
CLIENTS PROJECT: -
ENGINEERS PROJECT: 44238-004
CAD REFERENCE: 44238-004BP3-I11
SCALE N/A
HAZEN AND SAWYER
Environmental Engineers & Scientists
4000 Hollywood Boulevard, Suite 750N
Hollywood, Florida 33021
Certificate of Authorization Number: 2771
LUIS P. AMARAL
No. 47573
P.E.
DESIGNED L.P.A.
DRAWN R.D.A.
CHECKED G.A.B.
PROJ. ENGR. G.A.B.
NO. DATE ISSUED FOR BY
FURNISHED BY METERING PUMP SKID SUPPLIER DIV 11
AMMONIA PUMP SKID CONTROL PANEL
LCP-54100
AMMONIA UNLOADING CONTROL PANEL FURNISHED BY DIV 17
LCP-54000
LEAK DETECTION CONTROL PANEL FURNISHED BY DIV 15
LCP-56000
AMMONIA BULK STORAGE TANK
AST-54000
AMP-54001
AMP-54002
LEAK SENSOR
EYEWASH/SHOWER
CONTAINMENT AREA
TO HIGH SERVICE PUMP STATION INJECTION POINT
I-10
FROM EFFLUENT FLOW METER FIT-43000
AUTO/MANUAL
HMI
PLC-50000
NOTE:
* - FURNISHED BY EYEWASH/SHOWER SUPPLIER
3" QUICK CONNECT WITH KEY LOCK DUST CAP VAPOR RETURN
3" QUICK CONNECT WITH KEY LOCK DUST CAP
2" QUICK CONNECT WITH KEY LOCK DUST CAP
PLOT DATE: 6/10/2014 3:01 PM BY: HSCALIT

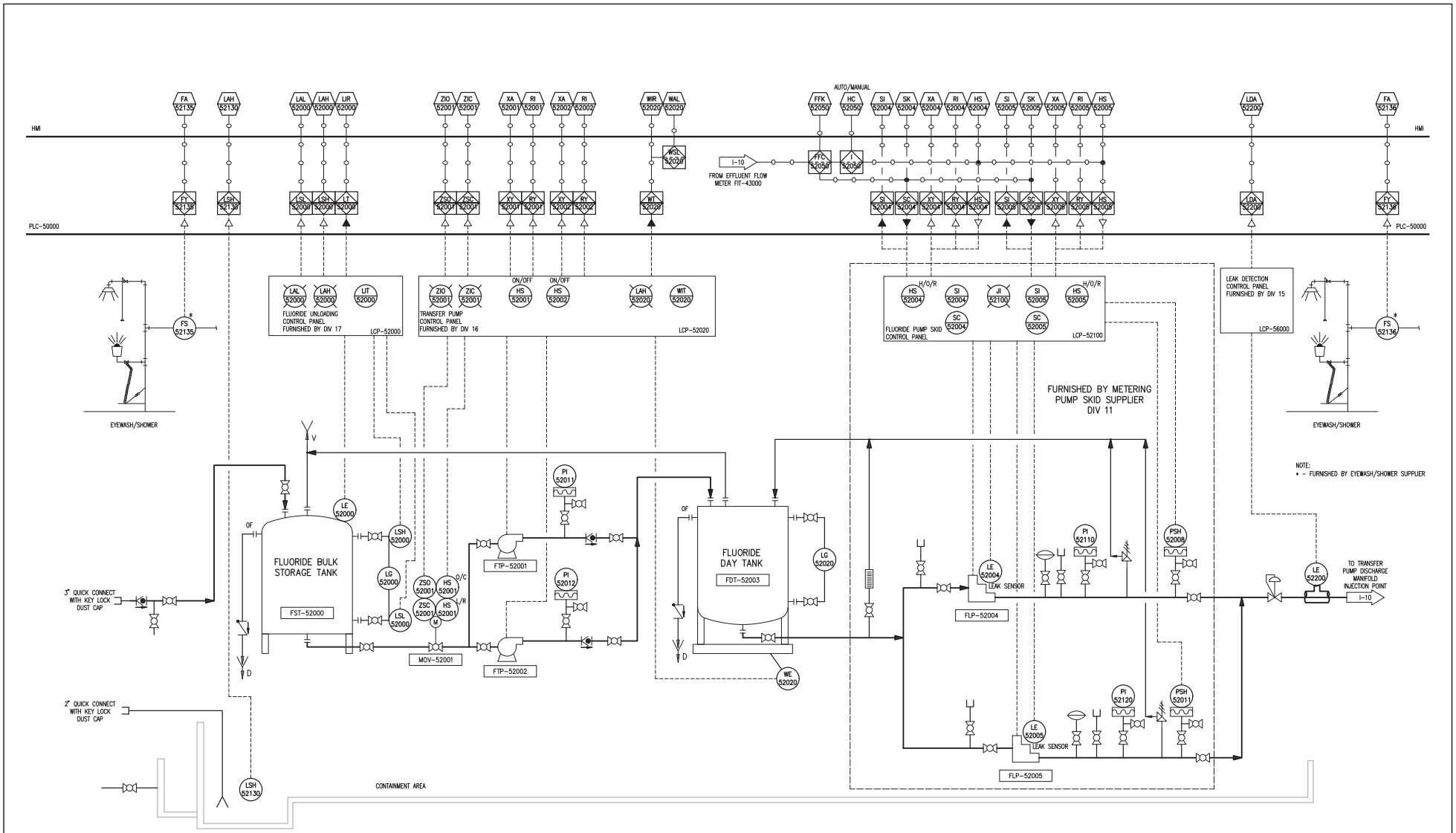

NO.	DATE	ISSUED FOR	BY

DESIGNED L.P.A.
DRAWN R.D.A.
CHECKED G.A.B.
PROJ. ENGR. G.A.B.

LUIS P. AMARAL P.E.
No. 47573

HAZEN AND SAWYER
Environmental Engineers & Scientists
4000 Hollywood Boulevard, Suite 750N
Hollywood, Florida 33021
Certificate of Authorization Number: 2771

SCALE N/A

CLIENTS PROJECT: –
ENGINEERS PROJECT: 44238-004
CAD REFERENCE: 44238-004BP3-I12

NORTH MIAMI FLORIDA
CITY OF NORTH MIAMI
PUBLIC WORKS UTILITIES

WINSON WATER TREATMENT PLANT
BID PACKAGE 3: WTP REHABILITATION
CHEMICAL HANDLING FACILITY – FLUORIDE FEED SYSTEMS

DATE: JUNE 2014
SHEET: 227 OF 335
DRAWING: I-12

PERMITTING

PLOT DATE: 6/10/2014 3:02 PM BY: HSCALIT
XREFs= ..\..\..\Tblock\44238-004-BP3-TB
File = H:\44238-004\Drawings\Bid Package 3 - WTP Rehab\Instrumentation\Bid Package 3 - WTP Rehab\PID DWG\44238-004BP3-I12 Saved by lamaral Save date = 6/9/2014 6:06 PM

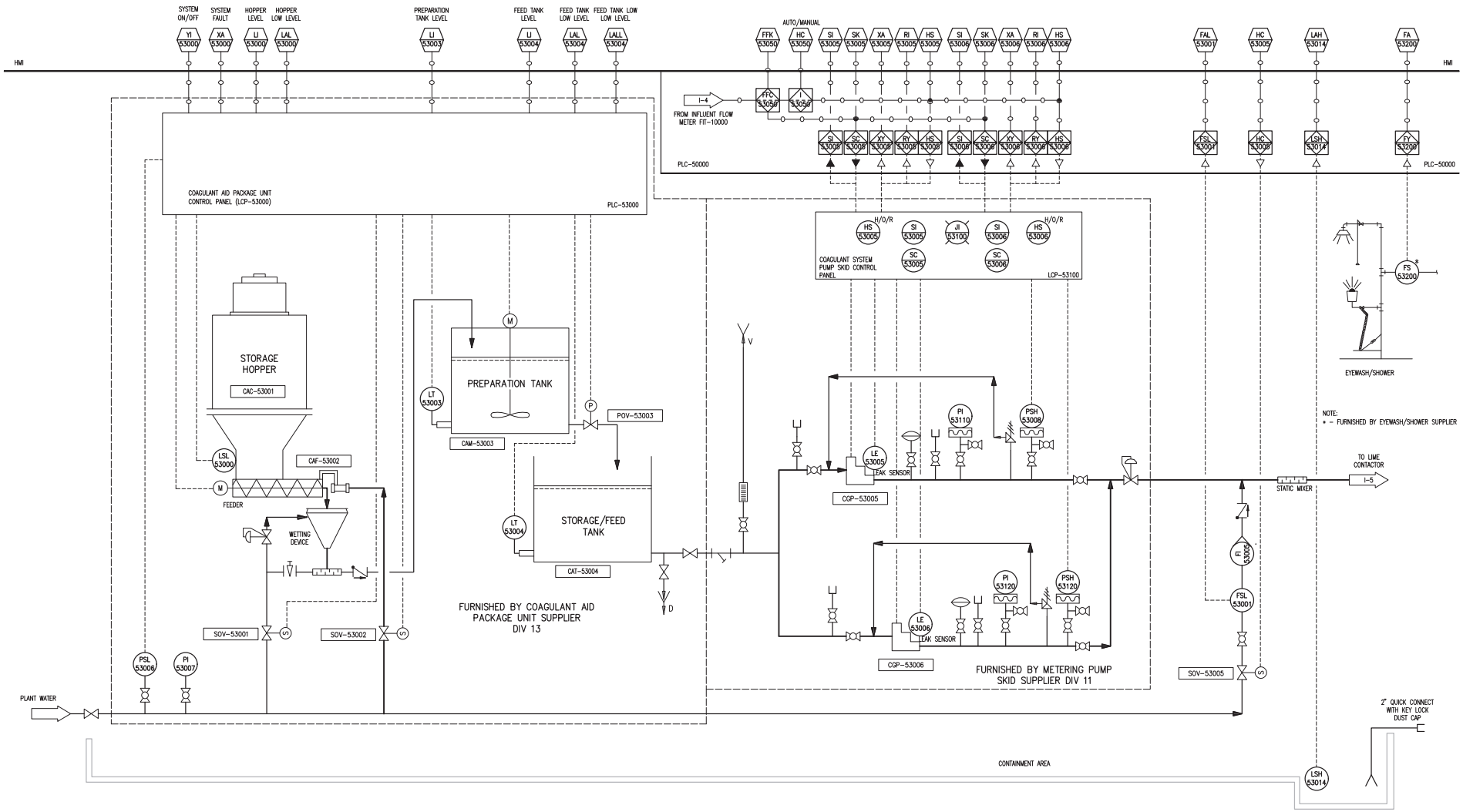

NO.	DATE	ISSUED FOR	BY

DESIGNED L.P.A.
DRAWN R.D.A.
CHECKED G.A.B.
PROJ. ENGR. G.A.B.

LUIS P. AMARAL P.E.
No. 47573

HAZEN AND SAWYER
Environmental Engineers & Scientists
4000 Hollywood Boulevard, Suite 750N
Hollywood, Florida 33021
Certificate of Authorization Number: 2771

SCALE N/A

CLIENTS PROJECT: –
ENGINEERS PROJECT: 44238-004
CAD REFERENCE: 44238-004BP3-I13

NORTH MIAMI FLORIDA
CITY OF NORTH MIAMI
PUBLIC WORKS UTILITIES

WINSON WATER TREATMENT PLANT
BID PACKAGE 3: WTP REHABILITATION

CHEMICAL HANDLING FACILITY COAGULANT FEED SYSTEM

DATE: JUNE 2014
SHEET: 228 OF 335
DRAWING: I-13

PERMITTING

PLOT DATE: 6/10/2014 3:04 PM BY: HSCALIT
XREFs= ..\..\..\Tblock\44238-004-BP3-TB
File = H:\44238-004\Drawings\Bid Package 3 - WTP Rehab\Instrumentation\Bid Package 3 - WTP Rehab\PID DWG\44238-004BP3-I13 Saved by lamaral Save date = 6/9/2014 8:59 PM

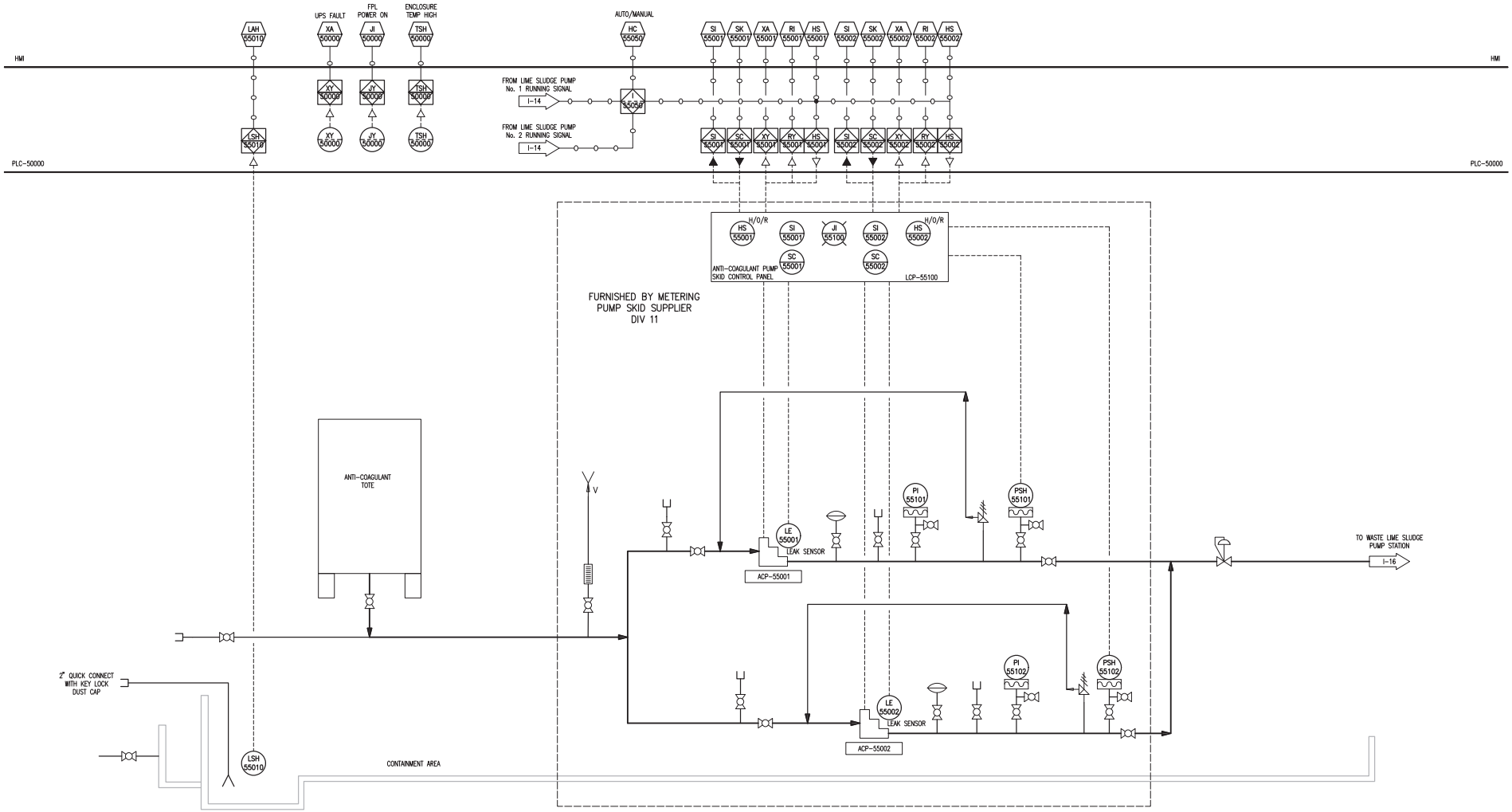

NO.	DATE	ISSUED FOR	BY

DESIGNED L.P.A.
DRAWN R.D.A.
CHECKED G.A.B.
PROJ. ENGR. G.A.B.

LUIS P. AMARAL P.E.
No. 47573

HAZEN AND SAWYER
Environmental Engineers & Scientists
4000 Hollywood Boulevard, Suite 750N
Hollywood, Florida 33021
Certificate of Authorization Number: 2771

SCALE N/A

CLIENTS PROJECT: –
ENGINEERS PROJECT: 44238-004
CAD REFERENCE: 44238-004BP3-I14

NORTH MIAMI FLORIDA
CITY OF NORTH MIAMI
PUBLIC WORKS UTILITIES

WINSON WATER TREATMENT PLANT
BID PACKAGE 3: WTP REHABILITATION
CHEMICAL HANDLING FACILITY – ANTI-COAGULANT FEED SYSTEM

DATE: JUNE 2014
SHEET: 229 OF 335
DRAWING: I-14

PERMITTING

PLOT DATE: 6/10/2014 3:04 PM BY: HSCALIT
XREFs= ..\..\..\Tblock\44238-004-BP3-TB
File = H:\44238-004\Drawings\Bid Package 3 - WTP Rehab\Instrumentation\Bid Package 3 - WTP Rehab\PID DWG\44238-004BP3-I14 Saved by lamaral Save date = 6/9/2014 7:31 PM

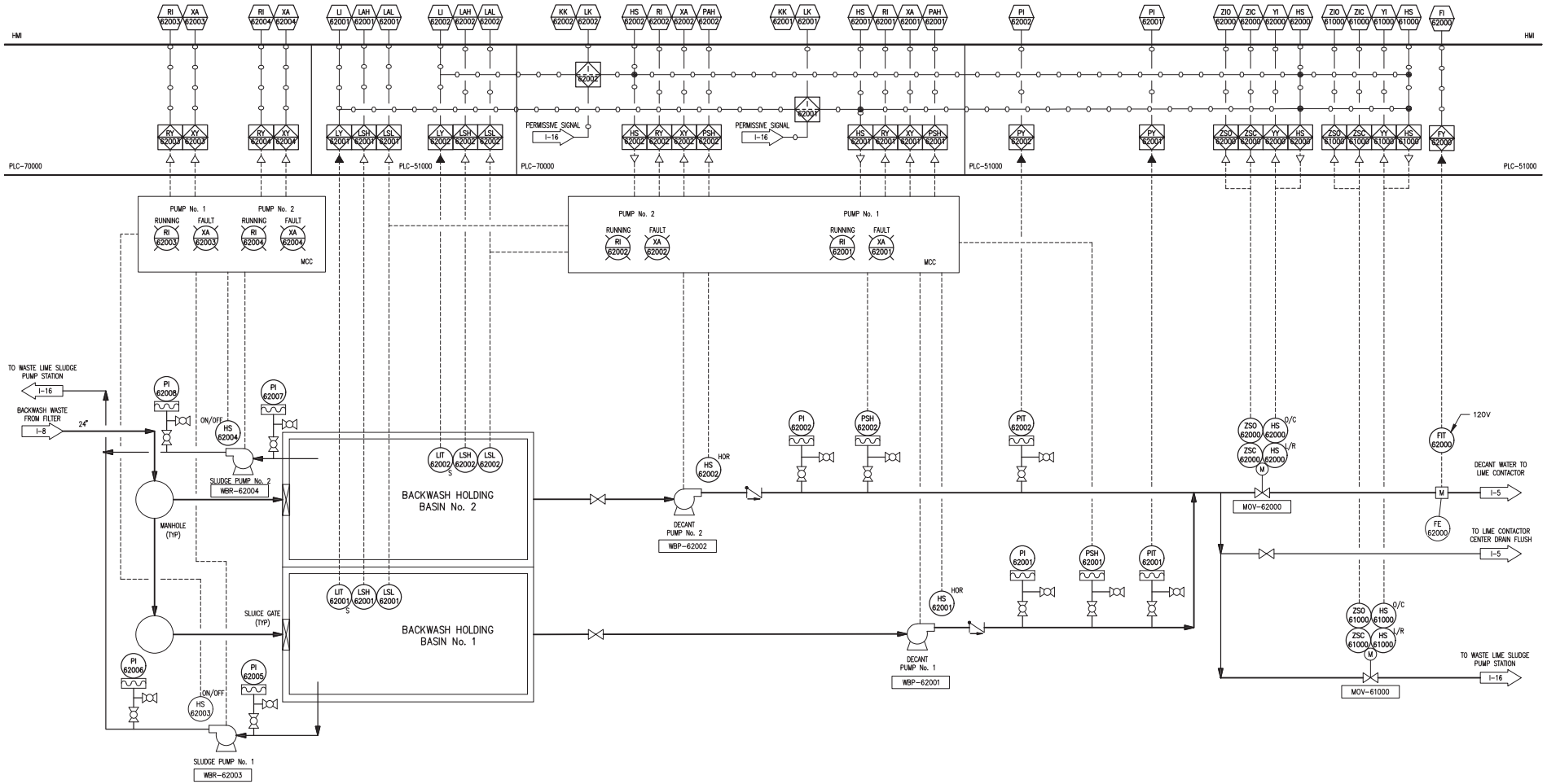

NO.	DATE	ISSUED FOR	BY

DESIGNED L.P.A.
DRAWN R.D.A.
CHECKED G.A.B.
PROJ. ENGR. G.A.B.

LUIS P. AMARAL P.E.
No. 47573

HAZEN AND SAWYER
Environmental Engineers & Scientists
4000 Hollywood Boulevard, Suite 750N
Hollywood, Florida 33021
Certificate of Authorization Number: 2771

SCALE N/A

CLIENTS PROJECT: –
ENGINEERS PROJECT: 44238-004
CAD REFERENCE: 44238-004BP3-I15

NORTH MIAMI FLORIDA
CITY OF NORTH MIAMI
PUBLIC WORKS UTILITIES

WINSON WATER TREATMENT PLANT
BID PACKAGE 3: WTP REHABILITATION
BACKWASH HOLDING BASINS

DATE: JUNE 2014
SHEET: 230 OF 335
DRAWING: I-15

PERMITTING

PLOT DATE: 6/10/2014 3:06 PM BY: HSCALIT
XREFs= ..\..\..\Tblock\44238-004-BP3-TB
File = H:\44238-004\Drawings\Bid Package 3 - WTP Rehab\Instrumentation\Bid Package 3 - WTP Rehab\PID DWG\44238-004BP3-I15 Saved by lamaral Save date = 6/9/2014 8:22 PM

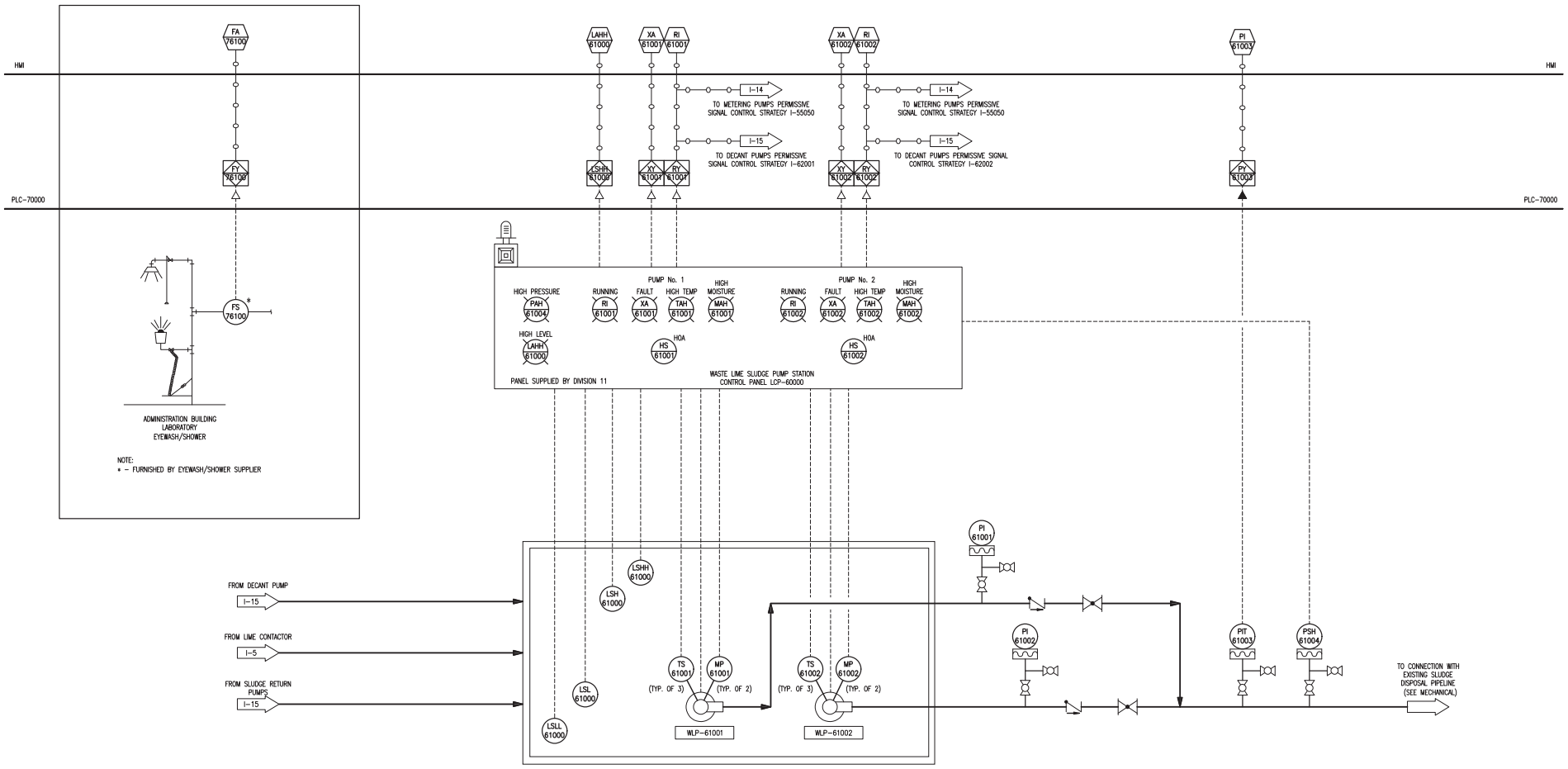

WASTE LIME SLUDGE PUMP STATION

NO.	DATE	ISSUED FOR	BY

DESIGNED L.P.A.
DRAWN R.D.A.
CHECKED G.A.B.
PROJ. ENGR. G.A.B.

LUIS P. AMARAL P.E.
No. 47573

HAZEN AND SAWYER
Environmental Engineers & Scientists
4000 Hollywood Boulevard, Suite 750N
Hollywood, Florida 33021
Certificate of Authorization Number: 2771

SCALE N/A

CLIENTS PROJECT: –
ENGINEERS PROJECT: 44238-004
CAD REFERENCE: 44238-004BP3-I16

NORTH MIAMI FLORIDA
CITY OF NORTH MIAMI
PUBLIC WORKS UTILITIES

WINSON WATER TREATMENT PLANT
BID PACKAGE 3: WTP REHABILITATION
WASTE LIME SLUDGE PUMP STATION

DATE: JUNE 2014
SHEET: 231 OF 335
DRAWING: I-16

PERMITTING

PLOT DATE: 6/10/2014 3:06 PM BY: HSCALIT
XREFs= ..\..\..\Tblock\44238-004-BP3-TB
File = H:\44238-004\Drawings\Bid Package 3 - WTP Rehab\Instrumentation\Bid Package 3 - WTP Rehab\PID DWG\44238-004BP3-I16 Saved by lamaral Save date = 6/9/2014 6:39 PM

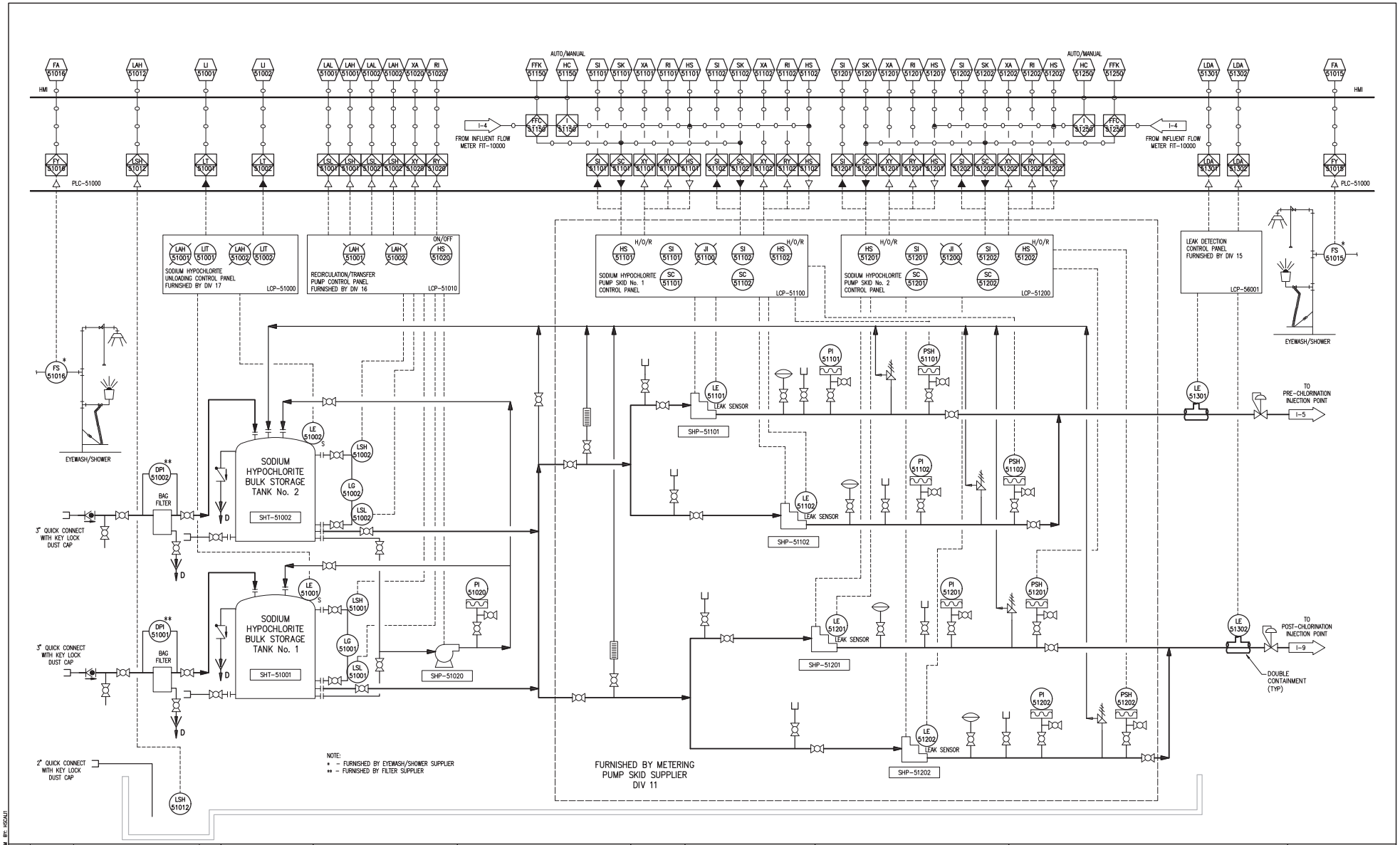

NO.	DATE	ISSUED FOR	BY

DESIGNED L.P.A.
DRAWN R.D.A.
CHECKED G.A.B.
PROJ. ENGR. G.A.B.

LUIS P. AMARAL P.E.
No. 47573

HAZEN AND SAWYER
Environmental Engineers & Scientists
4000 Hollywood Boulevard, Suite 750N
Hollywood, Florida 33021
Certificate of Authorization Number: 2771

SCALE N/A

CLIENTS PROJECT: –
ENGINEERS PROJECT: 44238-004
CAD REFERENCE: 44238-004BP3-I17

NORTH MIAMI FLORIDA
CITY OF NORTH MIAMI
PUBLIC WORKS UTILITIES

WINSON WATER TREATMENT PLANT
BID PACKAGE 3: WTP REHABILITATION
HYPOCHLORITE STORAGE AND FEED FACILITY

DATE: JUNE 2014
SHEET: 232 OF 335
DRAWING: I-17

PERMITTING

PLOT DATE: 6/10/2014 3:08 PM BY: HSCALIT
XREFs= ..\..\..\Tblock\44238-004-BP3-TB
File = H:\44238-004\Drawings\Bid Package 3 - WTP Rehab\Instrumentation\Bid Package 3 - WTP Rehab\PID DWG\44238-004BP3-I17 Saved by lamaral Save date = 6/9/2014 8:53 PM

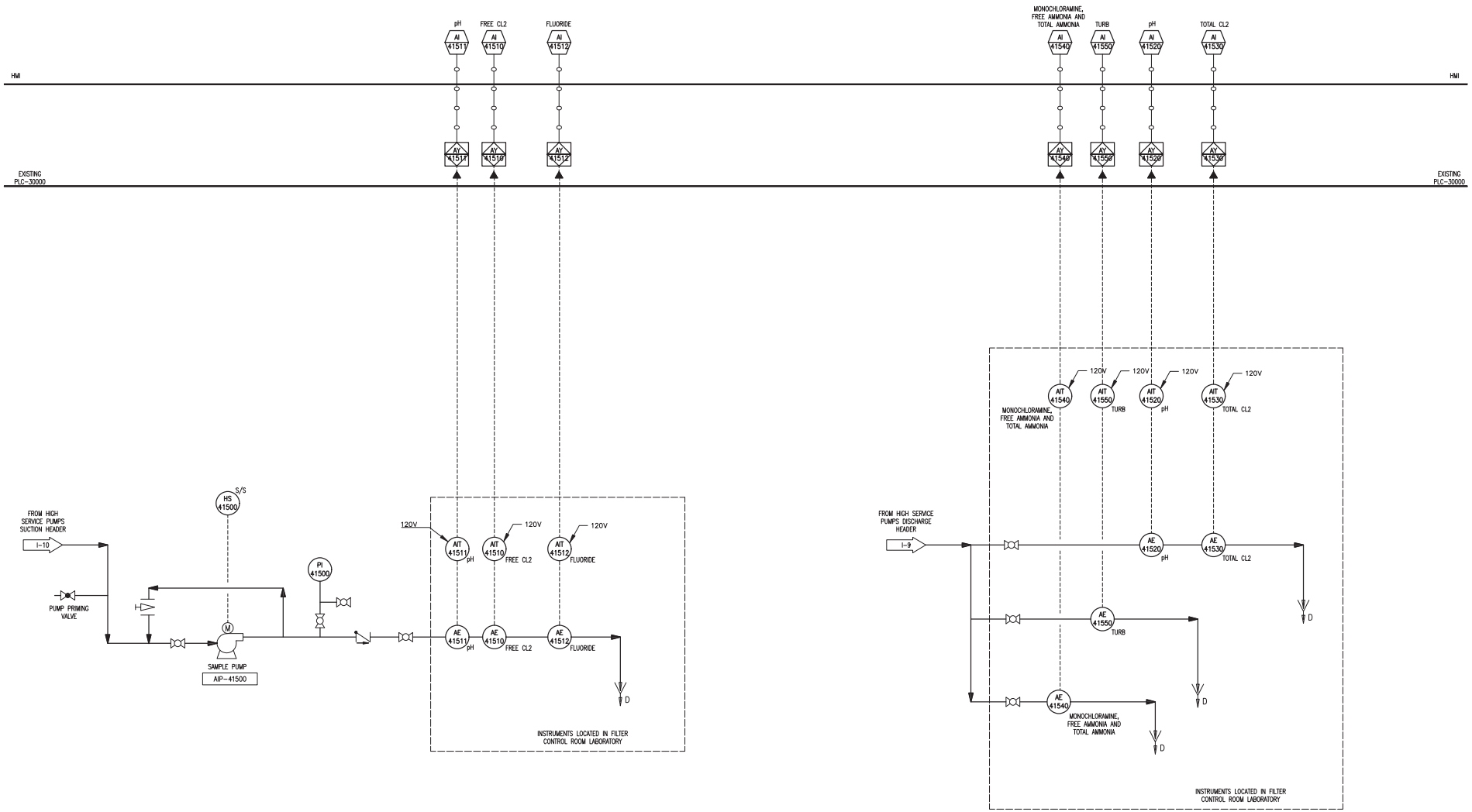

NO.	DATE	ISSUED FOR	BY

DESIGNED L.P.A.
DRAWN R.D.A.
CHECKED G.A.B.
PROJ. ENGR. G.A.B.

LUIS P. AMARAL P.E.
No. 47573

HAZEN AND SAWYER
Environmental Engineers & Scientists
4000 Hollywood Boulevard, Suite 750N
Hollywood, Florida 33021
Certificate of Authorization Number: 2771

SCALE N/A

CLIENTS PROJECT: –
ENGINEERS PROJECT: 44238-004
CAD REFERENCE: 44238-004BP3-I18

NORTH MIAMI FLORIDA
CITY OF NORTH MIAMI
PUBLIC WORKS UTILITIES

WINSON WATER TREATMENT PLANT
BID PACKAGE 3: WTP REHABILITATION
MASTER PUMP STATION ANALYZERS

DATE: JUNE 2014
SHEET: 233 OF 335
DRAWING: I-18

PERMITTING

PLOT DATE: 6/10/2014 3:09 PM BY: HSCALIT
XREFs= ..\..\..\Tblock\44238-004-BP3-TB
File = H:\44238-004\Drawings\Bid Package 3 - WTP Rehab\Instrumentation\Bid Package 3 - WTP Rehab\PID DWG\44238-004BP3-I18 Saved by lamaral Save date = 6/9/2014 7:14 PM

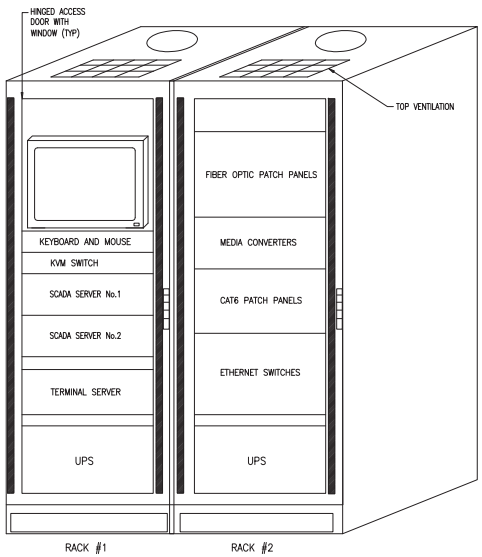

CONTROL ROOM NETWORK/SERVER RACKS

NTS

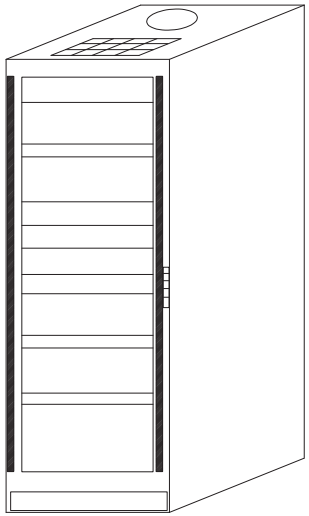

VIDEO/TELEMETRY RACK

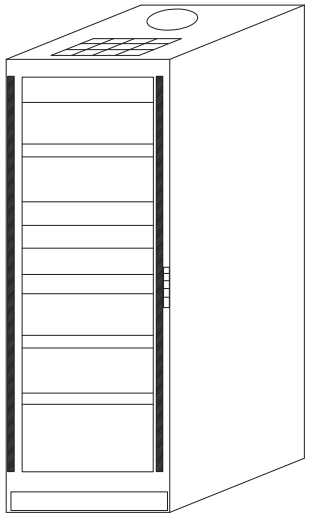

CITY WAN RACK

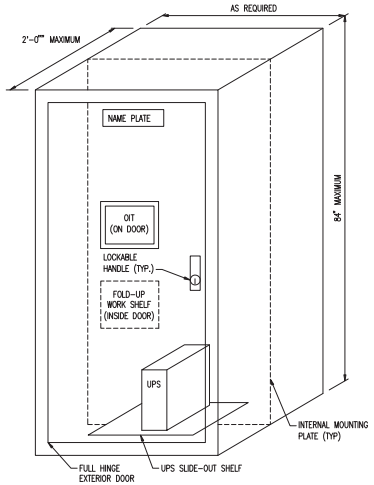

PLC ENCLOSURES

NTS

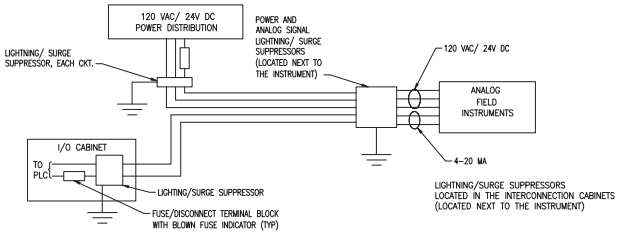

4-WIRE FIELD TRANSMITTERS (AC AND DC)

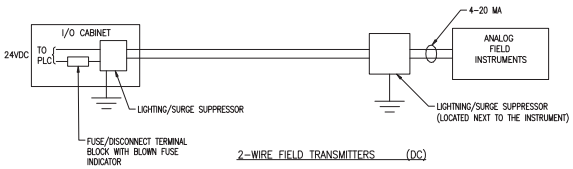

2-WIRE FIELD TRANSMITTERS (DC)

ANALOG CIRCUITS – LIGHTNING PROTECTION

NTS

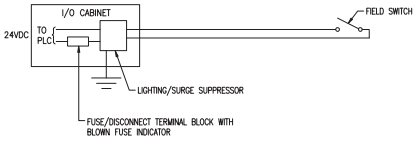

DISCRETE PLC-INPUT CIRCUIT PROTECTION

NTS

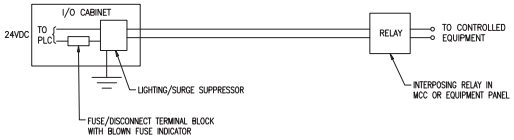

DISCRETE PLC-OUTPUT CIRCUIT PROTECTION

NTS

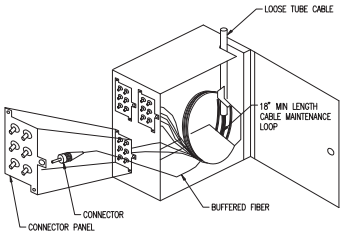

FIBER-OPTIC PATCH PANEL

NTS

NOTE:

FIBER-OPTIC PATCH PANEL TO BE INSTALLED AT EACH PLC ENCLOSURE.

NO.	DATE	ISSUED FOR	BY

DESIGNED L.P.A.
DRAWN R.D.A.
CHECKED G.A.B.
PROJ. ENGR. G.A.B.

LUIS P. AMARAL P.E.
No. 47573

HAZEN AND SAWYER
Environmental Engineers & Scientists
4000 Hollywood Boulevard, Suite 750N
Hollywood, Florida 33021
Certificate of Authorization Number: 2771

SCALE N/A

CLIENTS PROJECT: –
ENGINEERS PROJECT: 44238-004
CAD REFERENCE: 44238-004BP3-I19

NORTH MIAMI FLORIDA
CITY OF NORTH MIAMI
PUBLIC WORKS UTILITIES

WINSON WATER TREATMENT PLANT
BID PACKAGE 3: WTP REHABILITATION
ENCLOSURE DETAILS

DATE: JUNE 2014
SHEET: 234 OF 335
DRAWING: I-19

PERMITTING

PLOT DATE: 6/10/2014 3:09 PM BY: HSCALIT

XREFs= ..\..\..\Tblock\44238-004-BP3-TB

File = H:\44238-004\Drawings\Bid Package 3 - WTP Rehab\Instrumentation\Bid Package 3 - WTP Rehab\PID DWG\44238-004BP3-I19 Saved by lamaral Save date = 6/9/2014 7:34 PM

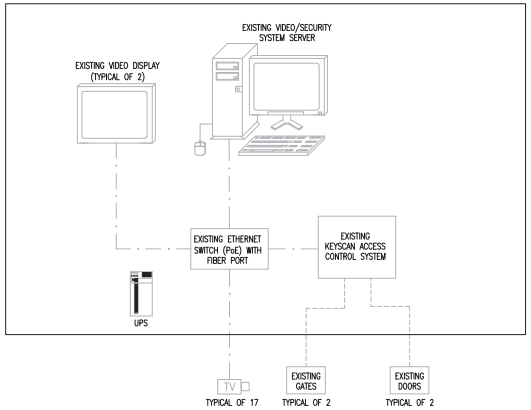

EXISTING VIDEO/SECURITY SYSTEM

LOCATED AT FILTER'S BUILDING OFFICE

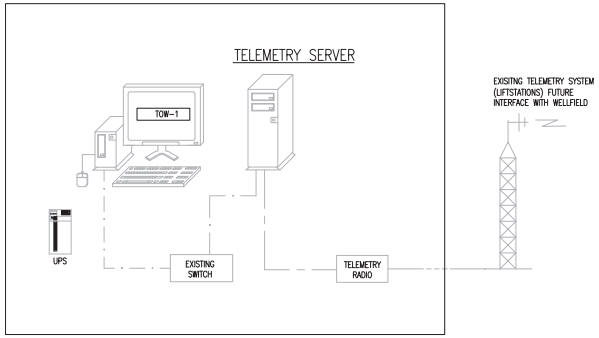

EXISTING TELEMETRY SYSTEM

LOCATED AT FILTER'S BUILDING OFFICE

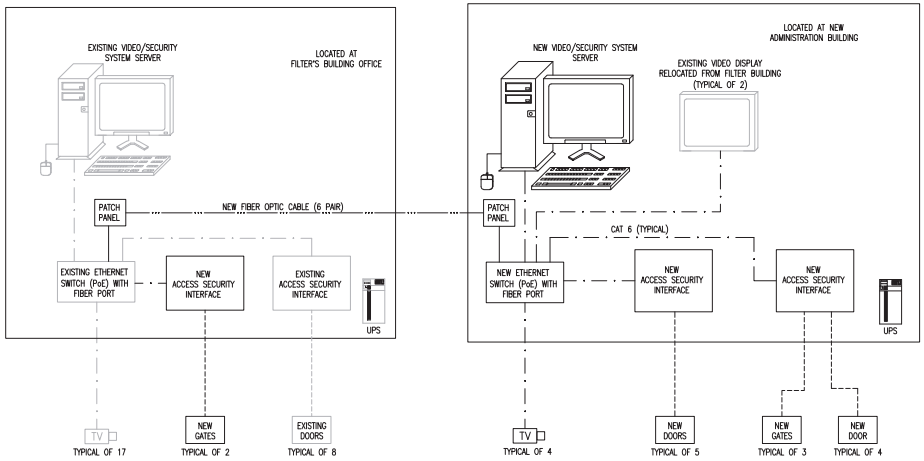

PROPOSED VIDEO/SECURITY SYSTEM MODIFICATIONS

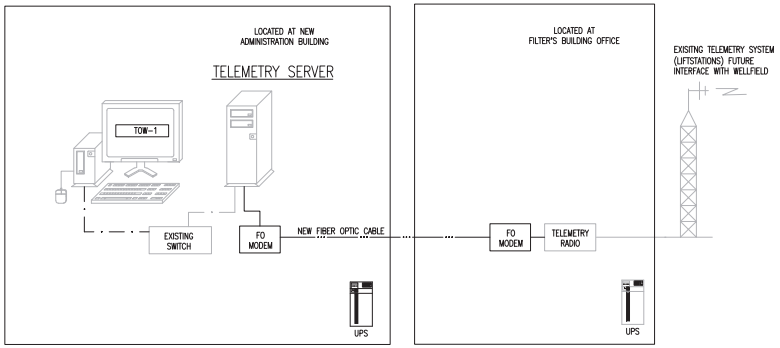

PROPOSED TELEMETRY SYSTEM MODIFICATIONS

NO.	DATE	ISSUED FOR	BY

DESIGNED L.P.A.
DRAWN R.D.A.
CHECKED G.A.B.
PROJ. ENGR. G.A.B.

LUIS P. AMARAL P.E.
No. 47573

HAZEN AND SAWYER
Environmental Engineers & Scientists
4000 Hollywood Boulevard, Suite 750N
Hollywood, Florida 33021
Certificate of Authorization Number: 2771

SCALE N/A

CLIENTS PROJECT: –
ENGINEERS PROJECT: 44238-004
CAD REFERENCE: 44238-004BP3-I20

NORTH MIAMI FLORIDA
CITY OF NORTH MIAMI
PUBLIC WORKS UTILITIES

WINSON WATER TREATMENT PLANT
BID PACKAGE 3: WTP REHABILITATION
SITE SECURITY AND TELEMETRY MODIFICATIONS

DATE: JUNE 2014
SHEET: 235 OF 335
DRAWING: I-20

PERMITTING

PLOT DATE: 6/10/2014 3:10 PM BY: HSCAU1

XREFs= ..\..\..\Tblock\44238-004-BP3-TB

File = H:\44238-004\Drawings\Bid Package 3 - WTP Rehab\Instrumentation\Bid Package 3 - WTP Rehab\PID DWG\44238-004BP3-I20 Saved by lamaral Save date = 6/9/2014 6:47 PM

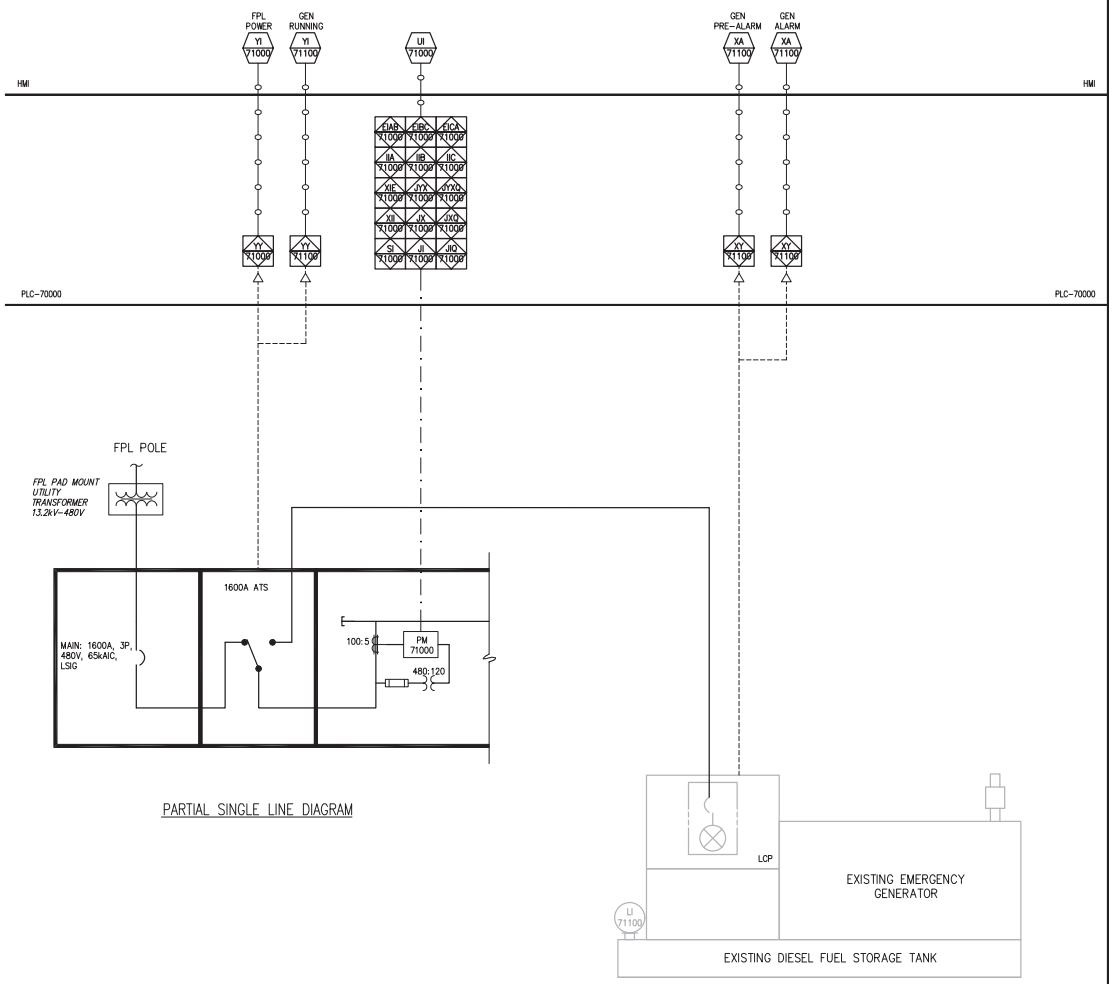

PARTIAL SINGLE LINE DIAGRAM

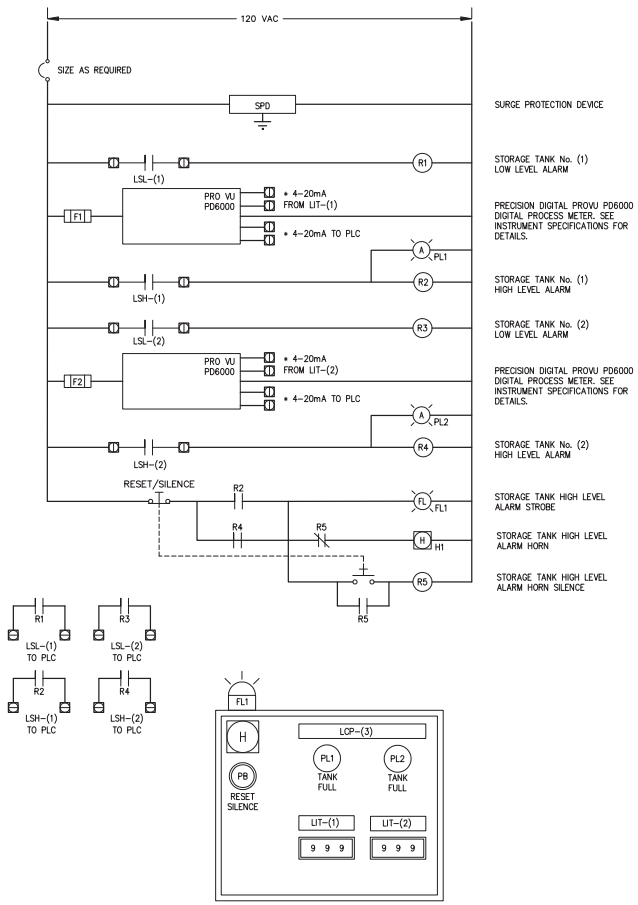

TYPICAL CHEMICAL STORAGE TANK LOADING ALARM PANEL

DESCRIPTION	(1)	(2)	(3)
FLUORIDE SYSTEM	52000	-----	52000
AMMONIA SYSTEM	54000	-----	54000
SODIUM HYPOCHLORITE SYSTEM	51001	51002	51000

NO.	DATE	ISSUED FOR	BY

DESIGNED L.P.A.
DRAWN R.D.A.
CHECKED G.A.B.
PROJ. ENGR. G.A.B.

LUIS P. AMARAL P.E.
No. 47573

HAZEN AND SAWYER
Environmental Engineers & Scientists
4000 Hollywood Boulevard, Suite 750N
Hollywood, Florida 33021
Certificate of Authorization Number: 2771

SCALE N/A

CLIENTS PROJECT: –
ENGINEERS PROJECT: 44238-004
CAD REFERENCE: 44238-004BP3-I21

NORTH MIAMI FLORIDA
CITY OF NORTH MIAMI
PUBLIC WORKS UTILITIES

WINSON WATER TREATMENT PLANT
BID PACKAGE 3: WTP REHABILITATION
ELECTRICAL MONITORING SYSTEM AND SCHEMATICS

DATE: JUNE 2014
SHEET: 236 OF 335
DRAWING: I-21

PERMITTING

XREFs= ..\..\..\Tblock\44238-004-BP3-TB

File = H:\44238-004\Drawings\Bid Package 3 - WTP Rehab\Instrumentation\Bid Package 3 - WTP Rehab\PID DWG\44238-004BP3-I21 Saved by lamaral Save date = 6/9/2014 5:17 PM

PLOT DATE: 6/10/2014 3:10 PM BY: HSCAU1

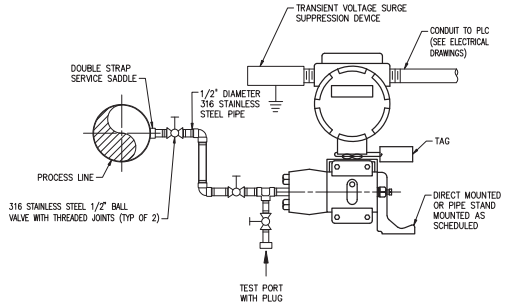

PRESSURE TRANSMITTER (REMOTE MOUNTED)

NTS

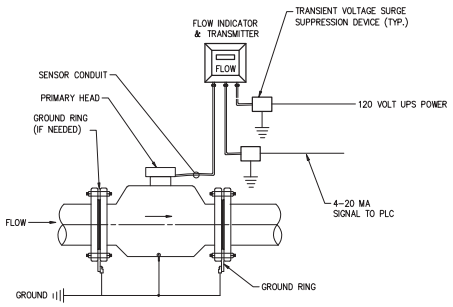

MAGNETIC FLOW METER

NTS

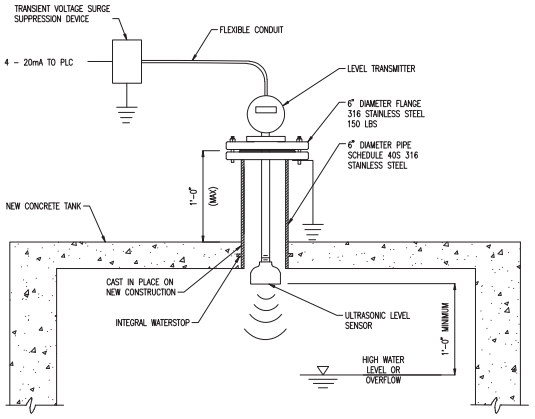

ULTRASONIC LEVEL TRANSMITTER-FLANGE MOUNT IN NEW CONCRETE TANK

NTS

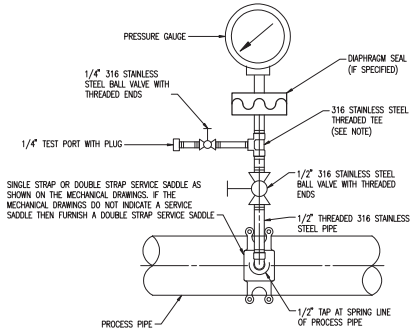

PRESSURE GAUGE INSTRUMENT OR SWITCH

NTS

NOTES:

1. IF A DIAPHRAGM SEAL IS REQUIRED, INSTALL THE TEST PORT AND VALVE ON THE SEAL'S FLUSHING CONNECTION INSTEAD OF TEE.
2. PROVIDE ISOLATING RING SEALS WHERE INDICATED ON THE MECHANICAL DRAWINGS.

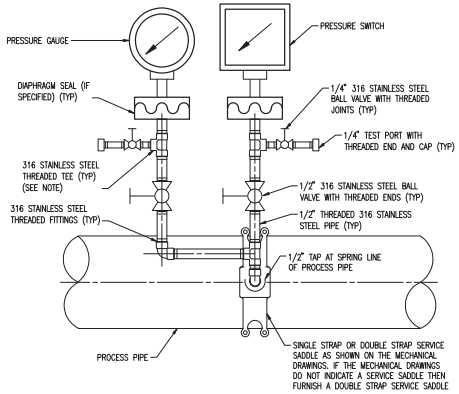

PRESSURE SWITCH AND GAUGE DETAIL

NTS

NOTES:

1. IF A DIAPHRAGM SEAL IS REQUIRED, INSTALL THE TEST PORT AND VALVE ON THE SEAL'S FLUSHING CONNECTION INSTEAD OF TEE.
2. PROVIDE ISOLATING RING SEALS WHERE INDICATED ON THE MECHANICAL DRAWINGS.

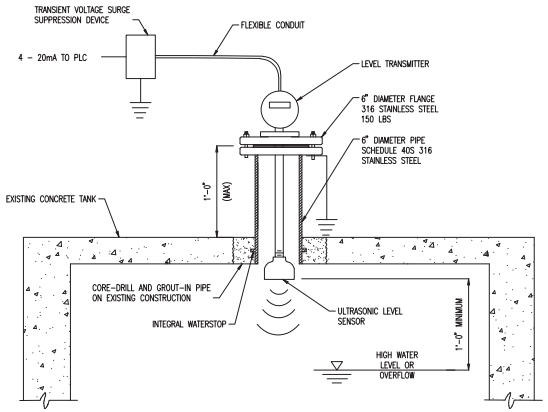

ULTRASONIC LEVEL TRANSMITTER-FLANGE MOUNT IN EXISTING CONCRETE TANK

NTS

NO.	DATE	ISSUED FOR	BY

DESIGNED L.P.A.
DRAWN R.D.A.
CHECKED G.A.B.
PROJ. ENGR. G.A.B.

LUIS P. AMARAL P.E.
No. 47573

HAZEN AND SAWYER
Environmental Engineers & Scientists
4000 Hollywood Boulevard, Suite 750N
Hollywood, Florida 33021
Certificate of Authorization Number: 2771

SCALE N/A

CLIENTS PROJECT: –
ENGINEERS PROJECT: 44238-004
CAD REFERENCE: 44238-004BP3-I22

NORTH MIAMI FLORIDA
CITY OF NORTH MIAMI
PUBLIC WORKS UTILITIES

WINSON WATER TREATMENT PLANT
BID PACKAGE 3: WTP REHABILITATION
INSTALLATION AND MISCELLANEOUS DETAILS SHEET 1

DATE: JUNE 2014
SHEET: 237 OF 335
DRAWING: I-22

PERMITTING

PLOT DATE: 6/10/2014 3:11 PM BY: HSPA201
XREFs= ..\..\..\Tblock\44238-004-BP3-TB
File = H:\44238-004\Drawings\Bid Package 3 - WTP Rehab\Instrumentation\Bid Package 3 - WTP Rehab\PID DWG\44238-004BP3-I22 Saved by lamaral Save date = 6/9/2014 7:35 PM

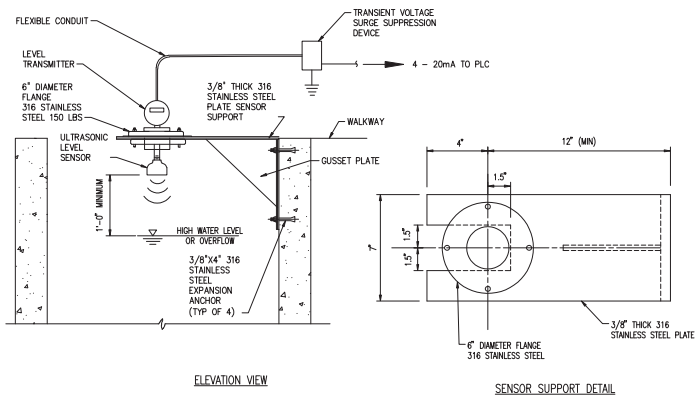

ULTRASONIC LEVEL TRANSMITTER – OPEN TANK MOUNTED

NTS

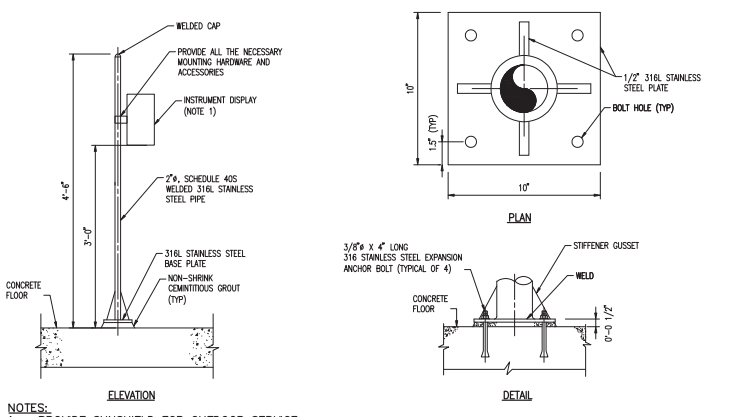

NOTES:
1. PROVIDE SUNSHIELD FOR OUTDOOR SERVICE

PIPE STAND TRANSMITTER MOUNT

NTS

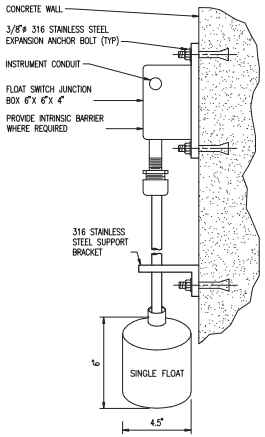

SUSPENDED FLOAT SWITCH

NTS

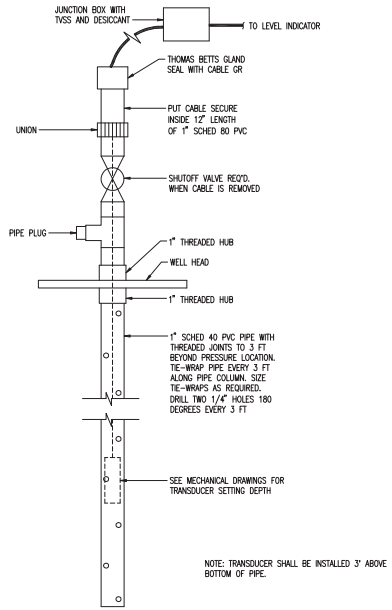

RAW WATER LEVEL TRANSDUCER

NTS

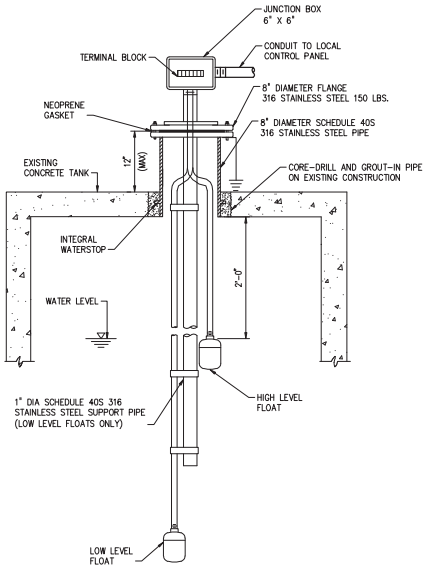

FLANGE MOUNTED FLOAT SWITCH – EXISTING CONCRETE TANK

NTS

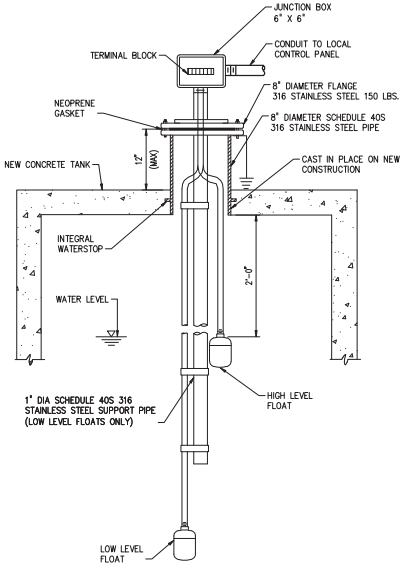

FLANGE MOUNTED FLOAT SWITCH – NEW CONCRETE TANK

NTS

NO.	DATE	ISSUED FOR	BY

DESIGNED L.P.A.
DRAWN R.D.A.
CHECKED G.A.B.
PROJ. ENGR. G.A.B.

LUIS P. AMARAL P.E.
No. 47573

HAZEN AND SAWYER
Environmental Engineers & Scientists
4000 Hollywood Boulevard, Suite 750N
Hollywood, Florida 33021
Certificate of Authorization Number: 2771

SCALE N/A

CLIENTS PROJECT: –
ENGINEERS PROJECT: 44238-004
CAD REFERENCE: 44238-004BP3-I23

NORTH MIAMI FLORIDA
CITY OF NORTH MIAMI
PUBLIC WORKS UTILITIES

WINSON WATER TREATMENT PLANT
BID PACKAGE 3: WTP REHABILITATION
INSTALLATION AND MISCELLANEOUS DETAILS
SHEET 2

DATE: JUNE 2014
SHEET: 238 OF 335
DRAWING: I-23

PERMITTING

PLOT DATE: 6/10/2014 3:12 PM BY: HICKSIT
XREFs= ..\..\..\Tblock\44238-004-BP3-TB
File = H:\44238-004\Drawings\Bid Package 3 – WTP Rehab\Instrumentation\Bid Package 3 – WTP Rehab\PID DWG\44238-004BP3-I23 Saved by lamaral Save date = 6/9/2014 5:04 PM

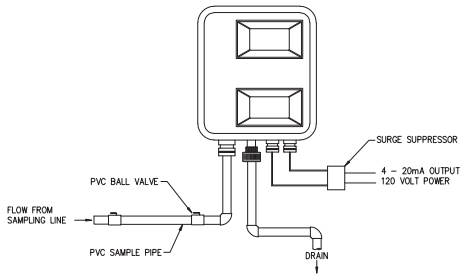

FLUORIDE ANALYZER INSTALLATION DETAIL

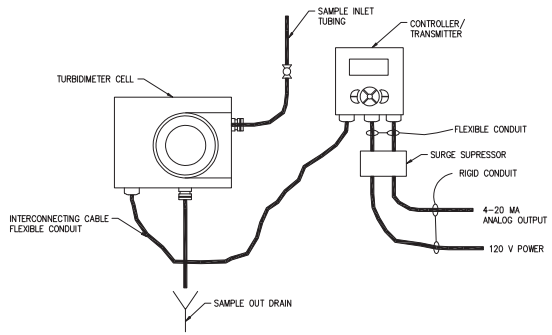

TURBIDITY ANALYZER INSTALLATION DETAIL

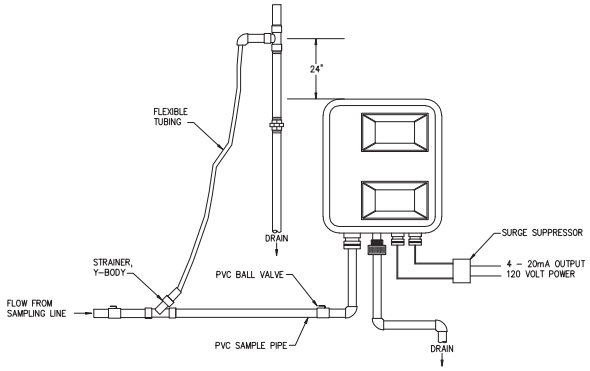

RESIDUAL CHLORINE ANALYZER INSTALLATION DETAIL

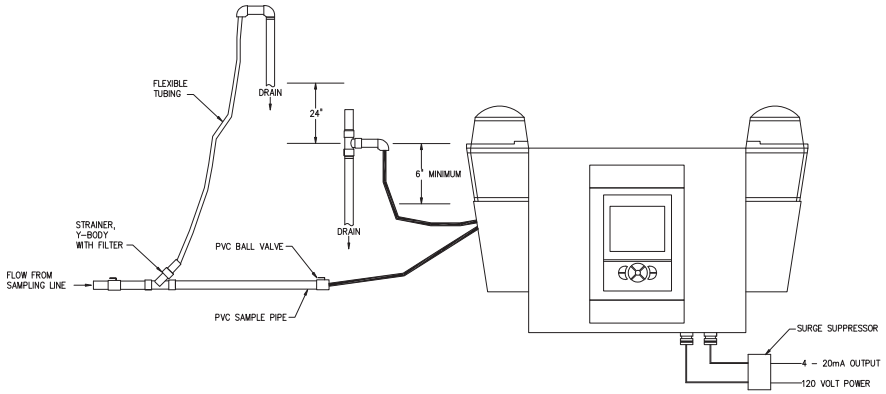

AMMONIA/MONOCHLORAMINE ANALYZER INSTALLATION DETAIL

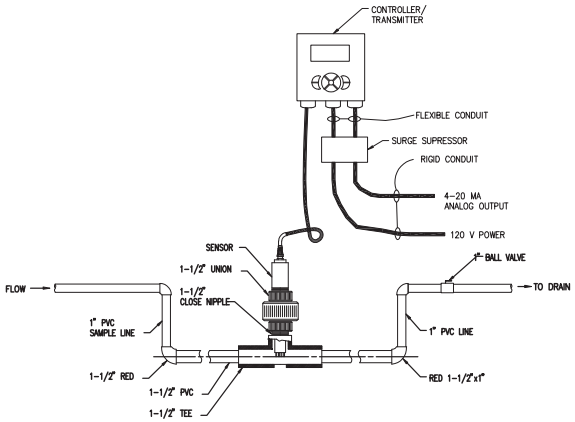

PH SENSOR INSTALLATION DETAIL

NO.	DATE	ISSUED FOR	BY

DESIGNED L.P.A.
DRAWN R.D.A.
CHECKED G.A.B.
PROJ. ENGR. G.A.B.

LUIS P. AMARAL P.E.
No. 47573

HAZEN AND SAWYER
Environmental Engineers & Scientists
4000 Hollywood Boulevard, Suite 750N
Hollywood, Florida 33021
Certificate of Authorization Number: 2771

SCALE N/A

CLIENTS PROJECT: –
ENGINEERS PROJECT: 44238–004
CAD REFERENCE: 44238–004BP3–I24

NORTH MIAMI FLORIDA
CITY OF NORTH MIAMI
PUBLIC WORKS UTILITIES

WINSON WATER TREATMENT PLANT
BID PACKAGE 3: WTP REHABILITATION
INSTALLATION AND MISCELLANEOUS DETAILS SHEET 3

DATE: JUNE 2014
SHEET: 239 OF 335
DRAWING: I–24

PERMITTING

XREFs= ..\..\..\Tblock\44238-004-BP3-TB

File = H:\44238-004\Drawings\Bid Package 3 – WTP Rehab\Instrumentation\Bid Package 3 – WTP Rehab\PID DWG\44238-004BP3-I24 Saved by lamaral Save date = 6/9/2014 7:27 PM

PLOT DATE: 6/10/2014 3:12 PM BY: HSCAU1

ELECTRICAL PLAN/LAYOUT

SYMBOL	DESCRIPTION
TTC	TELEPHONE TERMINAL CABINET
	TERMINAL JUNCTION BOX
	ELECTRICAL EQUIPMENT
X	CEILING MOUNTED DOWNLIGHT LUMINAIRE – SEE SCHEDULE FOR TYPE
X	FLOURESCENT LUMINAIRE, SURFACE OR LAY IN TYPE SEE SCHEDULE FOR TYPE
X	LUMINAIRE AND POLE – SEE SCHEDULE FOR TYPE
X	WALL MOUNTED LUMINAIRE – SEE SCHEDULE FOR TYPE
X	FLOOD LIGHTS – AIM IN THE DIRECTION SHOWN SEE SCHEDULE FOR TYPE
X	EXIT LIGHTS – SOLID SECTION IS DIRECTION OF FACE SEE SCHEDULE FOR TYPE
X	EMERGENCY LIGHT WITH BATTERY PACK SEE SCHEDULE FOR TYPE
LWx	EXTERIOR WALL PACK LIGHTING FIXTURES SEE SCHEDULE FOR TYPE AND DETAILS
X Y Z (TYP)	X=FIXTURE TYPE, Y=CIRCUIT, Z=SWITCH; IF NO Z, CONNECT DIRECTLY TO CIRCUIT BREAKER.
OC	LIGHTING OCCUPANCY SENSOR
WIFI	WIRELESS INTERNET EQUIPMENT
[B2]	CONDUIT/CONDUCTOR – REFER TO CIRCUIT SCHEDULE
LPA-2	HOME RUN – PANEL AND CIRCUIT NUMBER SHOWN
	EXPOSED CONDUIT AND CONDUCTORS*
	UNDERGROUND CONDUIT AND CONDUCTORS* NOTE: * ALL UNMARKED CONDUIT RUNS CONSIST OF 2#12, 1#12G IN 3/4"C.
YCX	YARD CONDUIT. REFER TO YARD CONDUIT SCHEDULE
DB	DIRECT BURIED CONDUIT
	CONDUIT, STUBBED AND CAPPED AS SHOWN
GND	GROUND WIRE, 4/0 UNLESS OTHERWISE NOTED
	6 FOOT GROUND WIRE PIGTAIL, 4/0 UNLESS OTHERWISE NOTED
	GROUND ROD – 5/8" x 20' COPPER CLAD UNLESS OTHERWISE NOTED
S	WALL SWITCH: 2- DOUBLE POLE, 3- THREE WAY, 4- FOUR WAY, WP-WEATHERPROOF, P- PILOT LIGHT, K- KEY OPERATED, D- DIMMER, CRE- CORROSION RESISTANT
	CONVENIENCE RECEPTACLE – 20A DUPLEX UNLESS SPECIFIED OTHERWISE: WP-WEATHERPROOF, C- CLOCK HANGER, TL- TWIST LOCK, CRE-CORROSION RESISTANT, GFI-GROUND FAULT INTERRUPTER
	CONVENIENCE RECEPTACLE – 20A QUADROPLEX UNLESS SPECIFIED OTHERWISE
	CONVENIENCE RECEPTACLE – 20A DUPLEX UNLESS SPECIFIED OTHERWISE. LOCATED ABOVE COUNTER TOP GFI-GROUND FAULT INTERRUPTER
	CONVENIENCE RECEPTACLE – 20A DUPLEX UNLESS SPECIFIED OTHERWISE. MOUNTED FLUSH IN FLOOR.
30	RECEPTACLE, SPECIAL PURPOSE – AMPERAGE AS INDICATED.
	TELEPHONE/DATA RECEPTACLE (OUTLET BOX, 18" AFF) W – WALL MOUNTED, 54" AFF
	TELEPHONE/DATA RECEPTACLE MOUNTED FLUSH IN FLOOR
J	JUNCTION BOX NEMA 12 ENCLOSURE UNLESS INDICATED OTHERWISE. 4X = NEMA 4X SS
TV	SECURITY CAMERA
	PROGRAMMABLE LOGIC CONTROLLER (PLC)

FIRE ALARM SYSTEM LEGEND ON DRAWING E-19

FIELD INSTRUMENTS ANNOTATION

XXX 000 — PS or SOURCE WHERE APPLICABLE

ACCESS CONTROL SYSTEM

MAG	MAGNETIC DOOR LOCK
CR	CARD READER
PTO	PUSH TO OPEN BUTTON
COM	INTERCOM

ABBREVIATIONS

ABBREVIATIONS	DESCRIPTION
A	AMMETER, AMPERE
AC	ALTERNATING CURRENT
AF	AMPERE FRAME
AFD	ADJUSTABLE FREQUENCY DRIVE
AFF	ABOVE FINISHED FLOOR
AFG	ABOVE FINISHED GRADE
AS	AMMETER SWITCH, AMPERE SENSOR
ASU	AIR SUPPLY UNIT
ATS	AUTOMATIC TRANSFER SWITCH
BC	BYPASS CONTACTOR
BRKR	BREAKER
C	CONDUIT, CONTACTOR
CB	CIRCUIT BREAKER
CKT	CIRCUIT
CMS	COMBINATION MOTOR STARTER
CPT	CONTROL POWER TRANSFORMER
CR	CONTROL RELAY
CT	CURRENT TRANSFORMER
DC	DIRECT CURRENT
DIV	DIVISION
DS	DISCONNECT SWITCH
E.C.	EMPTY CONDUIT
EF	EXHAUST FAN
EG	ELECTRICAL GROUND
ETM	ELAPSED TIME METER
EXST	EXISTING
FDR	FEEDER
F, FU	FUSE
FI	FLOW INDICATOR
FLR	FLOOR
FLUOR	FLUORESCENT
FM	FLOW METER
FS	FLOAT SWITCH, FLOW SWITCH
FT	FLOW TRANSMITTER
FUT	FUTURE
FVNR	FULL VOLTAGE NON-REVERSING STARTER
G	GREEN, GROUND
GALV	GALVANIZED
GEN	GENERATOR
GFI	GROUND FAULT INTERRUPTER
GFR	GROUND FAULT RELAY
GND	GROUND
HH	HANDHOLE
HID	HIGH INTENSITY DISCHARGE
HOA	HAND/OFF/AUTO
HOR	HAND/OFF/REMOTE
HPS	HIGH PRESSURE SODIUM
HVAC	HEATING, VENTILATING & AIR CONDITIONING
IC	INTERRUPTING CAPACITY
I & C	INSTRUMENTATION AND CONTROL
INST	INSTANTANEOUS
IP	INSTRUMENT PANEL (PANELBOARD)
J, J-BOX	JUNCTION BOX
K	KEY INTERLOCK
KK	KIRK KEY INTERLOCK
LA	LIGHTNING ARRESTER
LC	LIGHTING CONTACTOR
LP	LIGHTING PANEL (PANELBOARD)
LR	LOCAL/REMOTE, LATCHING RELAY
LS	LIMIT SWITCH
LT FLEX	LIQUID TIGHT FLEX CONDUIT
LTG	LIGHTING
M	MAGNETIC CONTACTOR COIL OR MOTOR
MA	MILLIAMPS
MCB	MAIN CIRCUIT BREAKER
MCC	MOTOR CONTROL CENTER
MDP	MAIN DISTRIBUTION PANEL
MERC	MERCURY VAPOR
MH	MOTOR HEATER, MANHOLE
MLO	MAIN LUGS ONLY
MPZ	MINI POWER ZONE
MS	MOTOR STARTER
MSC	MANUFACTURER SUPPLIED CABLE
MT	MOUNT
MTD	MOTOR TEMPERATURE DETECTOR
N	NEUTRAL
NC	NORMALLY CLOSED
NEMA	NATIONAL ELECTRIC MANUFACTURER'S ASSOCIATION
NF	NON-FUSED
NO	NORMALLY OPEN
NP	NAMEPLATE
NTS	NOT TO SCALE
OL	OVERLOAD RELAY
P	POLE
PB	PULL BOX
PC	PHOTOCELL
PH	PHASE
PM	PHASE MONITOR,POWER METER
PNL	PANEL
PP	POWER PANEL (480VAC)
PR	PAIR
PS	PRESSURE SWITCH
PT	POTENTIAL TRANSFORMER
PVC	POLYVINYL CHLORIDE CONDUIT
RCPT	RECEPTACLE
RMS	ROOT MEAN SQUARE
RS	RIGID STEEL CONDUIT
RGS	RIGID GALVANIZED STEEL CONDUIT
RTU	REMOTE TELEMETRY UNIT
SC	SURGE CAPACITOR
SF	SUPPLY FAN
SH	SPACE HEATER
S/N	SOLID NEUTRAL
SPD	SPEED
SSRVS	SOLID STATE REDUCED VOLTAGE STARTER
SST	STAINLESS STEEL
SV	SOLENOID VALVE
SW	SWITCH
SWBD	SWITCHBOARD
SWGR	SWITCHGEAR
SYM	SYMMETRICAL
T	THERMOSTAT
TB	TERMINAL BOARD
TDR	TIME DELAY RELAY
TJB	TERMINAL JUNCTION BOX
TS	THERMAL SWITCH
TSP	TWISTED SHIELDED PAIR
TVSS	TRANSIENT VOLTAGE SURGE SUPPRESSION
TYP	TYPICAL
UVR	UNDER VOLTAGE RELAY
V	VOLTMETER, VOLT
VFD	VARIABLE FREQUENCY DRIVE
VS	VOLTMETER SWITCH
W	WATT
WHD	WATTHOUR DEMAND METER
WP	WEATHERPROOF
XFMR	TRANSFORMER

ONE LINE DIAGRAMS, RISER DIAGRAMS AND SCHEMATICS

SYMBOL	DESCRIPTION
5	MOTOR SQUIRREL CAGE INDUCTION UNLESS OTHERWISE NOTED – HORSEPOWER INDICATED
	OVERLOAD RELAY HEATER
1	MAGNETIC STARTER WITH NEMA SIZE INDICATED
MCP	MOTOR CIRCUIT PROTECTOR, MAGNETIC, 3 POLE UNLESS INDICATED OTHERWISE.
400	CIRCUIT BREAKER, THERMAL MAGNETIC TRIP SHOWN, 3 POLE UNLESS INDICATED OTHERWISE.
400 225	FUSED SWITCH, SWITCH AND FUSE CURRENT RATING INDICATED, 3 POLE UNLESS INDICATED OTHERWISE.
100	SWITCH – CURRENT RATING INDICATED, 3 POLE UNLESS INDICATED OTHERWISE.
600AF 400AT	DRAWOUT CIRCUIT BREAKER, LOW VOLTAGE 600= FRAME RATING, 400=TRIP SETTING
600AF 400AT	DRAWOUT CIRCUIT BREAKER, MEDIUM VOLTAGE 600= FRAME RATING, 400=TRIP SETTING
600 400	DRAWOUT FUSED SWITCH, LOW OR MEDIUM VOLTAGE 600= FRAME RATING, 400=FUSE RATING
(3)	CURRENT TRANSFORMER, NUMBER OF WINDINGS INDICATED
480-120 /208V 15 KVA, 3ø K-4 RATED	TRANSFORMER, VOLTAGES, PHASE AND RATING INDICATED AS APPLICABLE
	LIGHTNING ARRESTER
	CAPACITOR OR SURGE CAPACITOR
M	UTILITY METER
G	GENERATOR
X 0-600V	METER SCALE RANGE SHOWN IF REQUIRED A – AMPS, V – VOLTS, PM – PHASE MONITOR, P – POWER METER
	FUSE
TVSS	TRANSIENT VOLTAGE SURGE SUPPRESSION
	GROUND
CPT 120V	CONTROL TRANSFORMER
GFR	GROUND FAULT RELAY WITH C.T.
	PUSH-BUTTON SWITCH, MOMENTARY CONTACT, NORMALLY OPEN
	PUSH-BUTTON SWITCH, MOMENTARY CONTACT, NORMALLY CLOSED
	PUSH BUTTON SWITCH, MAINTAINED CONTACTS WITH MECHANICAL INTERLOCK
	REMOTE DEVICE
A	INDICATING LIGHT – LETTER INDICATES COLOR A – AMBER, B – BLUE, C – CLEAR, G – GREEN, R – RED, W – WHITE

SYMBOL	DESCRIPTION
S M	MANUAL MOTOR STARTER SWITCH, NEMA 4X UNLESS OTHERWISE NOTED. NUMBER OF POLES AS REQUIRED
PB 4X	PUSH-BUTTON STATION, NEMA 12 ENCLOSURE UNLESS INDICATED OTHERWISE. 4X = NEMA 4X STAINLESS STEEL ENCLOSURE. SEE CONTROL DIAGRAMS FOR TYPE PUSH BUTTON REQUIRED
30 4X	NONFUSED DISCONNECT SWITCH, SIZE INDICATED, 3 POLE UNLESS INDICATED OTHERWISE, NEMA 12 ENCLOSURE, 4X = NEMA 4X STAINLESS STEEL
F 60 40 4X	FUSED DISCONNECT SWITCH, SIZE INDICATED (60 = SWITCH RATING: 40 = FUSE RATING) 3 POLE UNLESS INDICATED OTHERWISE, NEMA 12 ENCLOSURE, 4X = NEMA 4X STAINLESS STEEL
LC 30 4X	LIGHTING CONTACTOR, CURRENT RATING INDICATED, NEMA 12 ENCLOSURE UNLESS INDICATED OTHERWISE. SEE CONTROL DIAGRAM FOR NUMBER OF POLES. 4X = NEMA 4X STAINLESS STEEL
2 4X	MAGNETIC STARTER, NEMA SIZE INDICATED, NEMA 12 ENCLOSURE, UNLESS INDICATED OTHERWISE. SEE CONTROL DIAGRAM. 4X = NEMA 4X STAINLESS STEEL
2 4X	COMBINATION (FUSE OR CIRCUIT BREAKER AS INDICATED). MAGNETIC STARTER, NEMA SIZE INDICATED, NEMA 12 ENCLOSURE UNLESS INDICATED OTHERWISE. SEE CONTROL SCHEMATIC DIAGRAM. 4X = NEMA 4X STAINLESS STEEL
	ELECTRIC RESISTANCE HEATER
ETM	ELAPSED TIME METER
CRX	CONTACT – NORMALLY OPEN WITH COIL INDICATED
CRX	CONTACT – NORMALLY CLOSED WITH COIL INDICATED
CRX	CONTROL RELAY, X=SEQUENTIAL NUMBER
LRX (L)	LATCHING RELAY, X=SEQUENTIAL NUMBER L – LATCH, U – UNLATCH
TDX NOTC	TIME DELAY RELAY, X=SEQUENTIAL NUMBER NOTC=NORMALLY OPEN TIMED CLOSED NOTO=NORMALLY OPEN TIMED OPEN AFTER CLOSE NCTO=NORMALLY CLOSED TIMED OPEN NCTC=NORMALLY CLOSED TIMED CLOSED AFTER OPEN
	TEMPERATURE
	OPENS ON RISING TEMPERATURE, CLOSES ON FALLING TEMPERATURE
	CLOSES ON RISING TEMPERATURE, OPENS ON FALLING TEMPERATURE
H O A XOO OOX	SELECTOR SWITCH: MAINTAINED CONTACT WITH CONTACT POSITION INDICATED, CHART IDENTIFIES OPERATION

	POSITION		
CKT.	HAND	OFF	AUTO
1	X	O	O
2	O	O	X

X – CLOSED CONTACT
O – OPEN CONTACT

GENERAL

SYMBOL	DESCRIPTION
	CONNECTION POINT TO EQUIPMENT SPECIFIED, FURNISHED AND INSTALLED UNDER OTHER SECTIONS. RACEWAY, CONDUCTOR AND CONNECTION IN THIS SECTION.
1"C,2#12,1#12G 1"C,1-25/C TYPE 1	INDICATES RACEWAY AND CIRCUIT CONDUCTORS. FIRST NUMBER IS RACEWAY SIZE. THE FOLLOWING NUMBERS ARE THE CONDUCTOR QUANTITIES, SIZES, AND TYPES.
	DEMOLITION TO BE REMOVED OR DELETED

LINE WEIGHT

NEW — EXISTING

FUTURE

NOTE:
THIS IS A STANDARD LEGEND SHEET. SOME SYMBOLS OR ABBREVIATIONS MAY APPEAR ON THIS SHEET AND NOT BE UTILIZED ON PROJECT.

NO.	DATE	ISSUED FOR	BY
1	4-1-14	100% QA COMMENTS	H.J.V.

DESIGNED J.M.B.
DRAWN A.B.C.
CHECKED J.C.B.
PROJ. ENGR. J.C.B.

JOHN C. BURKE P.E.
No. 17301

HAZEN AND SAWYER
Environmental Engineers & Scientists
4000 Hollywood Boulevard, Suite 750N
Hollywood, Florida 33021
Certificate of Authorization Number: 2771

SCALE NTS

CLIENTS PROJECT: –
ENGINEERS PROJECT: 44238-004
CAD REFERENCE: 44238-004BP3-E01

NORTH MIAMI FLORIDA — CITY OF NORTH MIAMI PUBLIC WORKS UTILITIES

WINSON WATER TREATMENT PLANT
BID PACKAGE 3: WTP REHABILITATION

ELECTRICAL LEGEND AND SYMBOLS

DATE: JUNE 2014
SHEET: 240 OF 335
DRAWING: E-01

PERMITTING

PLOT DATE: 6/10/2014 11:51 AM BY: HS
XREFs= ..\Block\44238-004-BP3-TB
File = H:\44238-004\Drawings\Bid Package 3 - WTP Rehab\Electrical\44238-004BP3-E01 Saved by jbrood Save date = 6/9/2014 7:49 PM

GENERAL NOTES AND SPECIFICATIONS:

1. THE SCOPE OF WORK SHALL CONSIST PRIMARILY OF THE FOLLOWING:

1.1. PROVIDE AND INSTALL ALL ELECTRICAL SYSTEMS DESCRIBED IN THE DRAWINGS AND SPECIFICATIONS COMPLETE IN PLACE.
1.2. PROVIDE AND INSTALL ALL NEW WIRE AND CONDUIT NECESSARY TO COMPLETE ALL ELECTRICAL SYSTEMS COMPLETE IN PLACE.
1.3. PROVIDE AND INSTALL NEW LIGHTING AND RECEPTACLES.
1.4. PROVIDE AND INSTALL NEW TRANSFORMERS, LIGHTING PANELS, POWER DISTRIBUTION PANELS, DISCONNECTS, ETC. AS DESCRIBED IN THE DRAWINGS AND SPECIFICATIONS FOR A COMPLETE WORKING SYSTEM IN PLACE.
1.5. PROVIDE AND INSTALL ALL GROUNDING AS REQUIRED FOR A COMPLETE WORKING SYSTEM IN PLACE.

2. PROVIDE AND INSTALL ALL ELECTRICAL NECESSARY TO SUPPORT THE INSTRUMENTATION AND CONTROL DESIGN.

3. THE CONTRACTOR SHALL PROVIDE ALL MATERIALS AND LABOR TO INSTALL THE ELECTRICAL SYSTEMS AS INDICATED ON THE DRAWINGS. ITEMS NOT SHOWN BUT OBVIOUSLY NECESSARY FOR COMPLETION OF THE WORK SHALL BE INCLUDED.

4. THE INSTALLATION SHALL BE IN ACCORDANCE WITH THE NATIONAL ELECTRICAL CODE, NATIONAL ELECTRICAL SAFETY CODE, LOCAL CODES, CITY CODES AND FLORIDA BUILDING CODE.

5. THE CONTRACTOR SHALL OBTAIN ALL NECESSARY PERMITS, INSPECTIONS AND APPROVALS AND TO INCLUDE ALL FEES AS PART OF THE BID UNLESS OTHERWISE NOTED.

6. THE CONTRACTOR SHALL COORDINATE HIS WORK WITH THE ENGINEER AND OWNER.

7. THE CONTRACTOR SHALL, BEFORE SUBMITTING HIS BID, VISIT THE SITE OF THE PROJECT AND BECOME FAMILIAR WITH THE EXISTING CONDITIONS. NO ALLOWANCE WILL BE MADE FOR EXISTING CONDITIONS OR FAILURE OF THE CONTRACTOR TO OBSERVE THEM.

8. IT IS THE CONTRACTOR'S RESPONSIBILITY TO COORDINATE WITH ALL LOCAL UTILITIES, INCLUDING THE POWER AND TELEPHONE UTILITIES TO MEET ALL OF THEIR INSTALLATION REQUIREMENTS. ALL FEES, LABOR, EQUIPMENT OR MATERIALS NECESSARY TO MEET THESE REQUIREMENTS IS TO BE INCLUDED IN THE BID. THE CONTRACTOR SHALL OBTAIN, DELIVER AND INSTALL ALL CONDUITS, PULL-BOXES AND EQUIPMENT AS REQUIRED BY THE UTILITIES TO THEIR SPECIFICATIONS.

9. ALL EQUIPMENT AND MATERIAL SHALL BE UNUSED AND U.L. LISTED. ALL REFERENCES TO A PARTICULAR MANUFACTURER ARE GIVEN ON AN "APPROVED EQUAL" BASIS.

10. THE CONTRACTOR IS RESPONSIBLE TO TEST ALL SYSTEMS INSTALLED OR MODIFIED UNDER THIS PROJECT AND REPAIR OR REPLACE ALL DEFECTIVE WORK TO THE SATISFACTION OF THE ENGINEER AND OWNER.

11. ALL EQUIPMENT FURNISHED AND INSTALLED BY THE CONTRACTOR SHALL BE GUARANTEED AGAINST DEFECTS IN MATERIAL AND WORKMANSHIP FOR A PERIOD OF ONE YEAR FROM DATE OF ACCEPTANCE.

12. ALL CONDUCTORS SHALL BE COPPER. NO ALUMINUM ALLOWED UNLESS SPECIFICALLY INDICATED ON DRAWINGS.

13. SHOP DRAWINGS SHALL BE SUBMITTED FOR ALL ELECTRICAL & CONTROL EQUIPMENT AND MATERIAL.

14. ALL CONTROL PANELS SHALL BE CONSTRUCTED BY A UL-508A APPROVED PANEL VENDOR AND SHALL BEAR A UL-508A LABEL ON THE PANEL.

15. THE DRAWINGS ARE NOT INTENDED TO SHOW THE EXACT LOCATION OF CONDUIT RUNS. THESE ARE TO BE COORDINATED WITH THE OTHER TRADES SO THAT CONFLICTS ARE AVOIDED PRIOR TO INSTALLATIONS.

16. ALL LOCATIONS OF EQUIPMENT, PANELS ETC. ARE SHOWN FOR ILLUSTRATION PURPOSES. CONTRACTOR SHALL VERIFY AND COORDINATE EXACT LOCATION AND SIZE WITH ALL SUBCONTRACTORS AND EQUIPMENT SUPPLIERS PRIOR TO ANY INSTALLATION AND THEN INSTALL AS SUCH WITH CORRESPONDING CONDUIT STUB-UPS.

17. SEE OTHER DISCIPLINE DRAWINGS FOR COORDINATION OF ALL DRAWINGS. ANY CONFLICTS SHALL BE BROUGHT TO THE ENGINEER'S ATTENTION AND MOVEMENT OF CONDUITS OR OTHER ELECTRICAL EQUIPMENT SHALL BE ACCOMPLISHED WITHOUT ANY ADDITIONAL COST FOR THE OWNER.

18. LOCATIONS OF MANHOLES, HANDHOLES AND PULL BOXES ARE APPROXIMATE. CONTRACTOR SHALL COORDINATE EXACT LOCATION WITH EXISTING AND NEW PIPING OR CONDUIT AND ADJUST ACCORDINGLY.

19. NOT ALL CONDUITS SHOWN ON RISER AND ONE-LINE DIAGRAMS ARE SHOWN ON BUILDING LAYOUTS. CONTRACTOR SHALL SUPPLY ALL CONDUITS AND CABLES AS SHOWN ON RISER AND ONE-LINE DIAGRAMS.

20. ALL CIRCUITS SHALL BE IDENTIFIED IN JUNCTION BOXES, PULL BOXES, CONTROL PANELS, PANELBOARDS, LIGHTING POLES, CONTROLLERS AND SERVICE POINTS. IDENTIFICATION SHALL MATCH PANELBOARD SCHEDULES.

21. EXPOSED RUNS OF CONDUITS SHALL BE INSTALLED WITH RUNS PARALLEL OR PERPENDICULAR TO WALLS, STRUCTURAL MEMBERS OR INTERSECTIONS OF VERTICAL PLANES AND CEILINGS, WITH RIGHT ANGLE TURNS CONSISTING OF SYMMETRICAL BENDS OR PULL BOXES AS INDICATED ON THE DRAWINGS. BENDS AND OFFSETS SHALL BE AVOIDED WHERE POSSIBLE.

22. INSTRUMENTATION IS LOW VOLTAGE SIGNALS SUCH AS 4-20mA, TELEPHONE COMMUNICATION, FIRE ALARM COMMUNICATION. POWER CONDUIT SHALL ONLY CROSS OTHER CONDUITS PERPENDICULARLY AT RIGHT ANGLES WITH 6" SEPARATION.

23. CONDUCTOR PULLING TENSIONS SHALL NOT EXCEED MANUFACTURER'S RECOMMENDATION. CONTRACTOR SHALL INSTALL PULL BOXES TO MEET MANUFACTURER'S REQUIREMENTS.

24. MINIMUM DISTANCE ALLOWED BETWEEN POWER CONDUITS AND INSTRUMENTATION CONDUITS SHALL BE:

	VOLTAGE	DISTANCE
24.1.		
24.2.	4160V	3 FT
24.3.	480V	2 FT
24.4.	120V	1 FT

25. THE CONTRACTOR SHALL BE RESPONSIBLE FOR ALL CONDUIT AND WIRING INSTALLATION FOR ALL VENDOR PROVIDED EQUIPMENT (PACKAGE SYSTEMS). IF THE SHOP DRAWINGS DIFFER FROM THE DESIGNED FACILITIES, THE CONTRACTOR SHALL REDESIGN THE FACILITIES AND SUBMIT THE REVISED DESIGN FOR THE ENGINEER'S APPROVAL ALONG WITH THE SHOP DRAWINGS. THERE SHALL BE NO ADDITIONAL COST TO THE OWNER FOR THE REDESIGN NOR FOR ANY ADDITIONAL CONDUITS AND WIRING. DURING SUBMITTAL THE CONTRACTOR SHALL VERIFY ALL SUPPLIED BREAKER SIZES FOR ALL PACKAGED SYSTEMS SUCH AS HVAC, EXHAUST FANS, MIXERS, CHEMICAL PUMPS ETC. AND MODIFY ALL BREAKERS IN MCC'S AND PANELBOARDS ACCORDINGLY WITHOUT ANY ADDITIONAL COST TO THE OWNER.

26. ALL EXCAVATIONS FOR CONDUITS, HANDHOLES, MANHOLES AND PULLBOXES NEAR EXISTING PIPING, CONDUIT AND EQUIPMENT SHALL BE HAND EXCAVATED AND COORDINATED WITH PLANT ENGINEER.

27. MINIMUM DEPTH FROM TOP OF DUCTBANKS OR CONDUITS TO FINISHED GRADE SHALL BE 24" UNLESS OTHERWISE NOTED.

28. COLORED WARNING TAPE 6" WIDE SHALL BE INSTALLED 8" BELOW FINISHED GRADE DIRECTLY ABOVE ALL UNDERGROUND YARD CONDUITS ACCORDING TO THE FOLLOWING SCHEDULE:
28.1. POWER: RED
28.2. ALL OTHER CONDUITS: GREEN

29. CONTRACTOR SHALL RESTORE SIDEWALKS, ROADWAYS, SOD AND SPRINKLER SYSTEM PIPING TO MATCH EXISTING, AFTER THE COMPLETION OF THE CONDUITS AND PULLBOXES INSTALLATION.

30. GROUNDING SHALL BE INSTALLED IN ACCORDANCE WITH NEC, ARTICLE 250. THE GROUNDING SYSTEM TEST SHALL NOT EXCEED A 48 HOUR SPAN DRY RESISTANCE OF 10 OHMS. ADDITIONAL GROUNDING TO MEET THIS REQUIREMENT SHALL BE INSTALLED AT NO EXTRA COST. GROUNDING AND BONDING CONNECTIONS SHALL NOT BE PAINTED. ALL GROUNDING CONNECTIONS SHALL BE EXOTHERMIC UNLESS SPECIFICALLY INDICATED OTHERWISE.

31. AN EQUIPMENT GROUND WIRE SIZED PER NEC SHALL BE PULLED IN ALL ELECTRICAL CONDUITS, POWER AND CONTROL, WHETHER OR NOT INDICATED ON THE PLANS.

32. ALL ENCLOSURES, TJB, WIREWAY, PULL BOXES ETC. SHALL CONTAIN A GROUNDING BUS. CONNECT ALL RACEWAY BONDS TO THIS BUS VIA GROUNDING BUSHING AND EXTEND BONDING JUMPER FROM THIS BUS TO THE ENCLOSURE.

33. PRIMARY BUILDING GROUNDING SHALL BE AN EMBEDDED GRID OF MINIMUM #4/0 AWG WIRE INSTALLED IN THE FOUNDATION AND AROUND THE BUILDING PERIMETER TO FORM A COMPLETE LOOP. SECONDARY GROUND CONNECTIONS TO ALL METAL EQUIPMENT, HAND RAILS, STRUCTURAL STEEL, CONCRETE PADS, REBAR ETC. SHALL HAVE A MINIMUM #4 STRANDED COPPER CONDUCTOR BONDED USING APPROVED LUGS OR EXOTHERMIC CONNECTIONS. ALL EQUIPMENT GROUNDING CONDUCTORS PENETRATING CONCRETE SLABS OR FINISHED GRADE SHALL HAVE A 72" CONDUCTOR PIGTAIL AT EACH LOCATION FOR CONNECTION TO EQUIPMENT.

34. GROUND SURROUNDING YARD FENCE AND ALL YARD LIGHTING FIXTURES WITH MINIMUM #4 STRANDED COPPER CONDUCTORS BELOW GRADE TO SITE GROUNDING GRID PER NFPA 54/70.

35. ALL CONCRETE ENCASED DUCTBANKS SHALL CARRY A MINIMUM #4/0 AWG BARE COPPER GROUND WIRE, OVER THE ENTIRE LENGTH, WHICH SHALL BE CONNECTED TO THE SITE GROUNDING GRID AND GROUND RODS LOCATED CONNECTING MANHOLES, HANDHOLES OR PULL BOXES.

36. CONTRACTOR SHALL CORE DRILL EXISTING CONCRETE WALLS, FLOORS, MANHOLES, HANDHOLES AND PULL BOXES FOR CONDUIT PENETRATIONS. SEAL PENETRATIONS WITH NON-SHRINK GROUT OR APPROPRIATE FIRE RATED DEVICES WHERE APPLICABLE.

37. ALL CONDUITS PENETRATING RATED FIRE WALLS OR RATED FIRE FLOORS SHALL BE INSTALLED WITH U.L. APPROVED DEVICES TO MAINTAIN THE FIRE RATING OF THE WALL OR FLOOR PENETRATED.

38. PROVIDE CONDUIT DUCT SEAL AT ALL CONDUIT ENDS.

39. ALL SPARE CONDUITS SHALL BE SEALED WITH A CAP OF SAME MATERIAL AT BOTH ENDS AND A PULL STRING INSTALLED WITH IDENTIFICATION ON BOTH ENDS.

40. ALL RECEPTACLES SHALL BE INSTALLED 18" AFF UNLESS OTHERWISE NOTED. LIGHT SWITCHES SHALL BE MOUNTED 48" AFF UNLESS OTHERWISE NOTED.

41. ALL RECEPTACLES WITHIN 6 FEET OF A SINK SHALL BE GFI.

42. FLEXIBLE CONDUITS SHALL BE USED TO TERMINATE ALL MOTORS AND OTHER VIBRATING EQUIPMENT AND SHALL BE BETWEEN 18" AND 3' IN LENGTH.

43. ELECTRICAL PULL BOXES SHALL BE SUPPLIED WITH PVC JUNCTION BOXES AND A STEEL TRAFFIC-RATED COVER MARKED "ELECTRICAL" OR "SIGNAL".

44. TYPEWRITTEN PANEL SCHEDULES SHALL BE INSTALLED IN EACH PANELBOARD, AND TYPEWRITTEN TERMINAL BLOCK SCHEDULES IN EACH CONTROL CABINET.

45. ALL SPDs SHALL BE INTEGRAL TO THE NEW EQUIPMENT SHOWN AND SUPPLIED AS ONE UNIT AND ONE U.L. ENTITY.

46. AS PART OF THE ELECTRICAL SUBMITTAL, CONTRACTOR SHALL PROVIDE A LAYOUT OF THE ELECTRICAL ROOM SHOWING SIZES OF ALL EQUIPMENT AND THEIR SPATIAL RELATIONSHIPS.

47. BRANCH CIRCUITS EXCEEDING 100 FT IN LENGTH SHALL BE WIRED WITH MINIMUM #10 AWG WIRES.

48. ALL ELECTRICAL EQUIPMENT SUPPORTS AN OTHER MATERIAL IN DESIGNATED WET AREAS SHALL BE NEMA 4X 316 STAINLESS STEEL OR NON-METALLIC.

49. ALL OUTDOOR LIGHTING FIXTURES SHALL BE OF COPPER FREE CONSTRUCTION.

50. CONTRACTOR SHALL BALANCE PANELBOARD LOADS AT THE END OF THE PROJECT.

51. WHEN NOTED AS STAINLESS STEEL OR S.S. IT SHALL MEAN 316 STAINLESS STEEL.

NO.	DATE	ISSUED FOR	BY

DESIGNED J.M.B.
DRAWN A.B.C.
CHECKED J.C.B.
PROJ. ENGR. J.M.B.

JOHN C. BURKE P.E.
No. 17301

HAZEN AND SAWYER
Environmental Engineers & Scientists
4000 Hollywood Boulevard, Suite 750N
Hollywood, Florida 33021
Certificate of Authorization Number: 2771

SCALE NTS

CLIENTS PROJECT: –
ENGINEERS PROJECT: 44238-004
CAD REFERENCE: 44238-004BP3-E02

NORTH MIAMI FLORIDA
CITY OF NORTH MIAMI
PUBLIC WORKS UTILITIES

WINSON WATER TREATMENT PLANT
BID PACKAGE 3: WTP REHABILITATION
ELECTRICAL NOTES

DATE: JUNE 2014
SHEET: 241 OF 335
DRAWING: E-02

PERMITTING

PLOT DATE: 6/10/2014 11:52 AM BY: HS
XREFs= ..\Tblock\44238-004-BP3-TB
File = H:\44238-004\Drawings\Bid Package 3 - WTP Rehab\Electrical\44238-004BP3-E02 Saved by HScaff Save date = 6/9/2014 6:42 PM

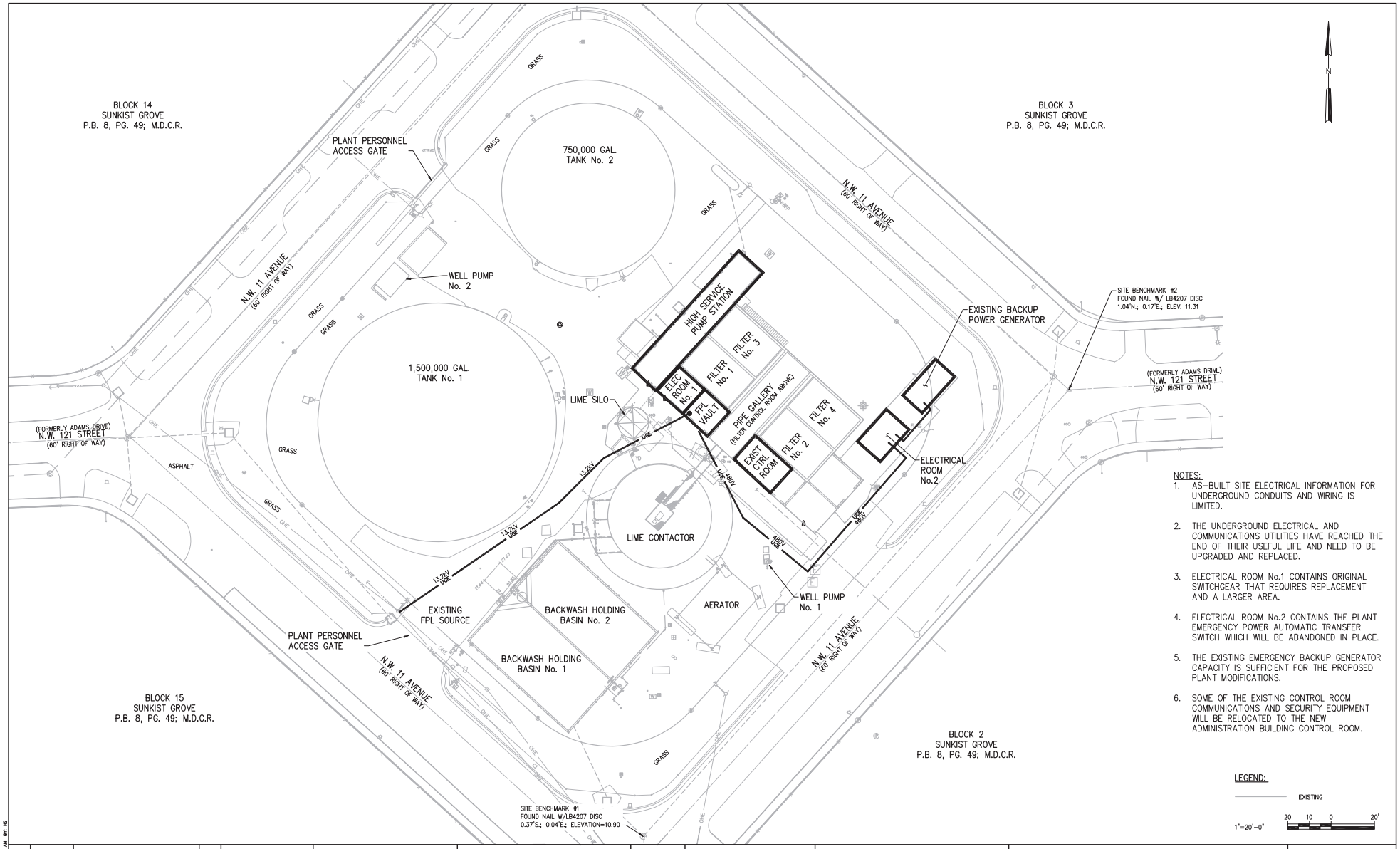

NOTES:

1. AS-BUILT SITE ELECTRICAL INFORMATION FOR UNDERGROUND CONDUITS AND WIRING IS LIMITED.
2. THE UNDERGROUND ELECTRICAL AND COMMUNICATIONS UTILITIES HAVE REACHED THE END OF THEIR USEFUL LIFE AND NEED TO BE UPGRADED AND REPLACED.
3. ELECTRICAL ROOM No.1 CONTAINS ORIGINAL SWITCHGEAR THAT REQUIRES REPLACEMENT AND A LARGER AREA.
4. ELECTRICAL ROOM No.2 CONTAINS THE PLANT EMERGENCY POWER AUTOMATIC TRANSFER SWITCH WHICH WILL BE ABANDONED IN PLACE.
5. THE EXISTING EMERGENCY BACKUP GENERATOR CAPACITY IS SUFFICIENT FOR THE PROPOSED PLANT MODIFICATIONS.
6. SOME OF THE EXISTING CONTROL ROOM COMMUNICATIONS AND SECURITY EQUIPMENT WILL BE RELOCATED TO THE NEW ADMINISTRATION BUILDING CONTROL ROOM.

LEGEND:

EXISTING

1"=20'-0" 20 10 0 20'

NO.	DATE	ISSUED FOR	BY

DESIGNED J.M.B.
DRAWN A.B.C.
CHECKED J.C.B.
PROJ. ENGR. J.C.B.

JOHN C. BURKE P.E.
No. 17301

HAZEN AND SAWYER
Environmental Engineers & Scientists
4000 Hollywood Boulevard, Suite 750N
Hollywood, Florida 33021
Certificate of Authorization Number: 2771

SCALE 1"=20'-0"

CLIENTS PROJECT: –
ENGINEERS PROJECT: 44238-004
CAD REFERENCE: 44238-004BP3-E03

NORTH MIAMI FLORIDA
CITY OF NORTH MIAMI
PUBLIC WORKS UTILITIES

WINSON WATER TREATMENT PLANT
BID PACKAGE 3: WTP REHABILITATION
ELECTRICAL SITE PLAN
EXISTING

DATE: JUNE 2014
SHEET: 242 OF 335
DRAWING: E-03

PERMITTING

PLOT DATE: 6/10/2014 11:53 AM BY: HS
XREFs= ..\Base-BP3\C-Site-Survey-X,..\Tblock\44238-004-BP3-TB
File = H:\44238-004\Drawings\Bid Package 3 - WTP Rehab\Electrical\44238-004BP3-E03 Saved by jbrood Save date = 6/9/2014 8:27 PM

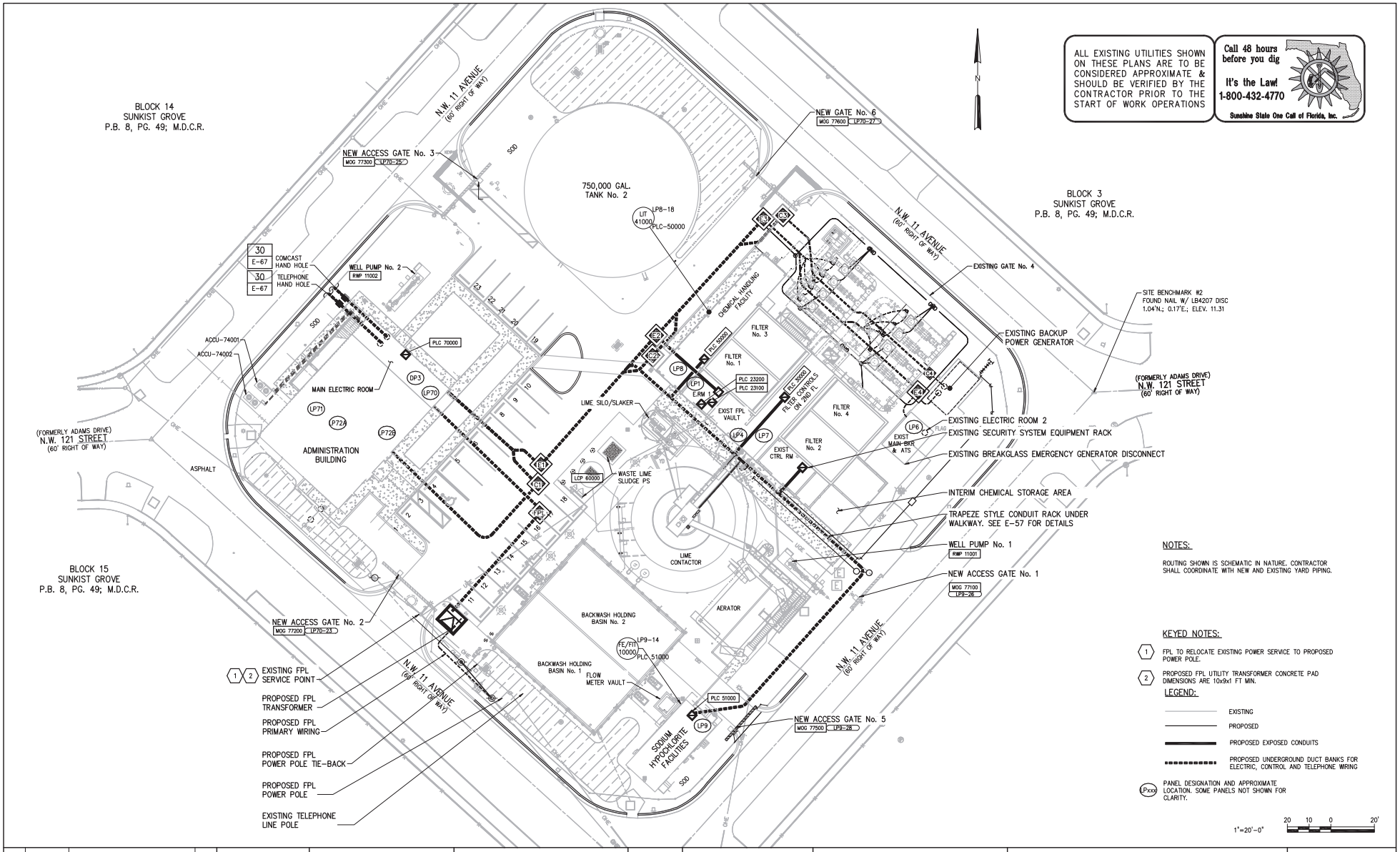

ALL EXISTING UTILITIES SHOWN ON THESE PLANS ARE TO BE CONSIDERED APPROXIMATE & SHOULD BE VERIFIED BY THE CONTRACTOR PRIOR TO THE START OF WORK OPERATIONS

Call 48 hours before you dig
It's the Law!
1-800-432-4770
Sunshine State One Call of Florida, Inc.

NOTES:

ROUTING SHOWN IS SCHEMATIC IN NATURE. CONTRACTOR SHALL COORDINATE WITH NEW AND EXISTING YARD PIPING.

KEYED NOTES:

1. FPL TO RELOCATE EXISTING POWER SERVICE TO PROPOSED POWER POLE.
2. PROPOSED FPL UTILITY TRANSFORMER CONCRETE PAD DIMENSIONS ARE 10x9x1 FT MIN.

LEGEND:

- EXISTING
- PROPOSED
- PROPOSED EXPOSED CONDUITS
- PROPOSED UNDERGROUND DUCT BANKS FOR ELECTRIC, CONTROL AND TELEPHONE WIRING
- (LPxxx) PANEL DESIGNATION AND APPROXIMATE LOCATION. SOME PANELS NOT SHOWN FOR CLARITY.

NO.	DATE	ISSUED FOR	BY
1	4-1-14	100% QA COMMENTS	H.J.V.

DESIGNED J.M.B.
DRAWN J.M.B.
CHECKED J.C.B.
PROJ. ENGR. J.C.B.

JOHN C. BURKE P.E.
No. 17301

HAZEN AND SAWYER
Environmental Engineers & Scientists
4000 Hollywood Boulevard, Suite 750N
Hollywood, Florida 33021
Certificate of Authorization Number: 2771

SCALE 1"=20'-0"

CLIENTS PROJECT: –
ENGINEERS PROJECT: 44238-004
CAD REFERENCE: 44238-004BP3-E04

NORTH MIAMI FLORIDA
CITY OF NORTH MIAMI
PUBLIC WORKS UTILITIES

WINSON WATER TREATMENT PLANT
BID PACKAGE 3: WTP REHABILITATION

ELECTRICAL SITE PLAN
PROPOSED

DATE: JUNE 2014
SHEET: 243 OF 335
DRAWING: E-04

PERMITTING

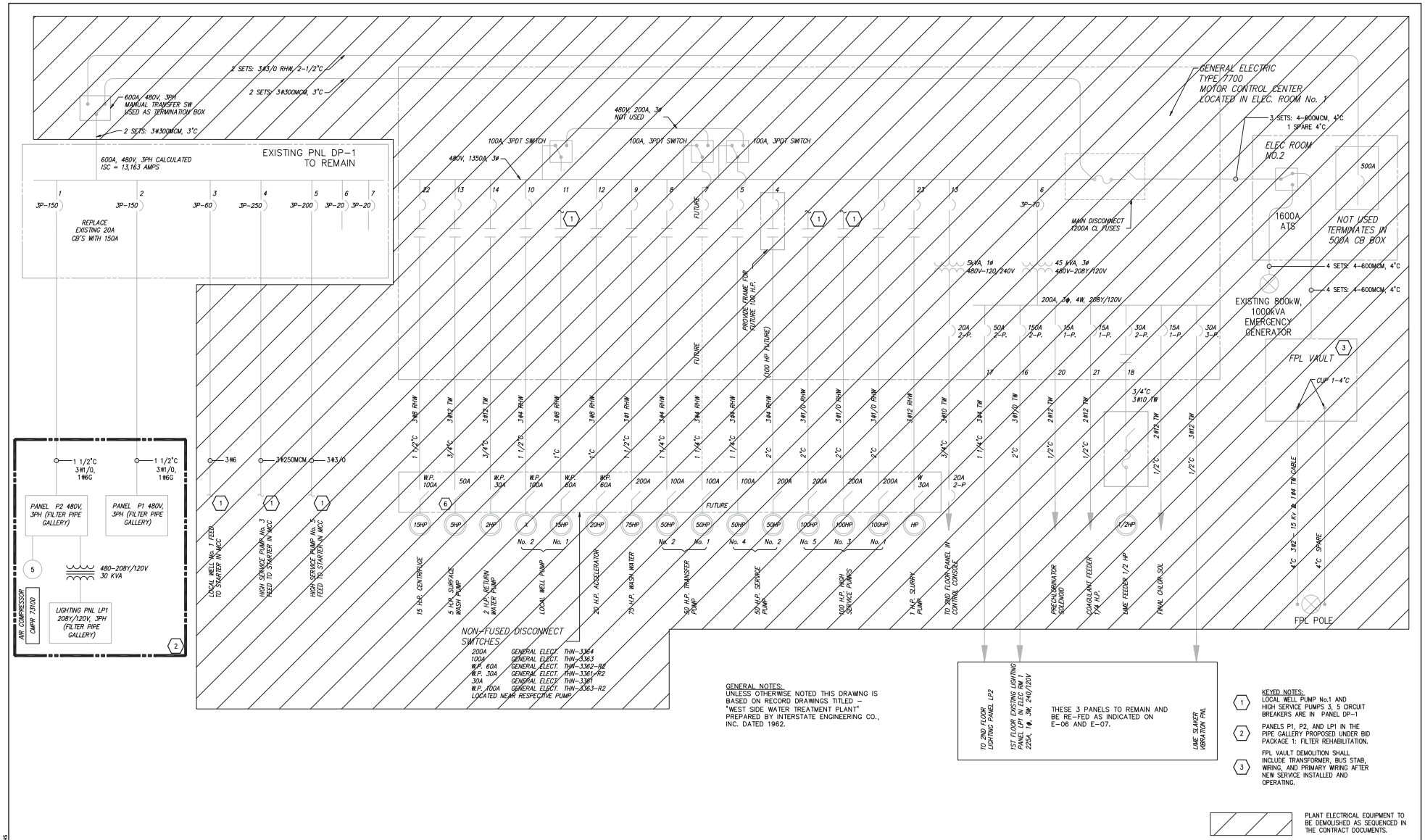

GENERAL NOTES:
UNLESS OTHERWISE NOTED THIS DRAWING IS BASED ON RECORD DRAWINGS TITLED – "WEST SIDE WATER TREATMENT PLANT" PREPARED BY INTERSTATE ENGINEERING CO., INC. DATED 1962.

KEYED NOTES:
1. LOCAL WELL PUMP No.1 AND HIGH SERVICE PUMPS 3, 5 CIRCUIT BREAKERS ARE IN PANEL DP-1
2. PANELS P1, P2, AND LP1 IN THE PIPE GALLERY PROPOSED UNDER BID PACKAGE 1: FILTER REHABILITATION.
3. FPL VAULT DEMOLITION SHALL INCLUDE TRANSFORMER, BUS STAB, WIRING, AND PRIMARY WIRING AFTER NEW SERVICE INSTALLED AND OPERATING.

PLANT ELECTRICAL EQUIPMENT TO BE DEMOLISHED AS SEQUENCED IN THE CONTRACT DOCUMENTS.

NO.	DATE	ISSUED FOR	BY

DESIGNED J.M.B.
DRAWN G.B.P.
CHECKED J.C.B.
PROJ. ENGR. J.C.B.

JOHN C. BURKE P.E.
No. 17301

HAZEN AND SAWYER
Environmental Engineers & Scientists
4000 Hollywood Boulevard, Suite 750N
Hollywood, Florida 33021
Certificate of Authorization Number: 2771

SCALE –

CLIENTS PROJECT: –
ENGINEERS PROJECT: 44238-004
CAD REFERENCE: 44238-004BP3-E05

NORTH MIAMI FLORIDA
CITY OF NORTH MIAMI
PUBLIC WORKS UTILITIES

WINSON WATER TREATMENT PLANT
BID PACKAGE 3: WTP REHABILITATION
EXISTING FACILITY SINGLE LINE DIAGRAM

DATE: JUNE 2014
SHEET: 244 OF 335
DRAWING: E-05

PERMITTING

PLOT DATE: 6/10/2014 11:55 AM BY: HS
XREFs= ..\Tblock\44238-004-BP3-TB
File = H:\44238-004\Drawings\Bid Package 3 - WTP Rehab\Electrical\44238-004BP3-E05 Saved by jbrood Save date = 6/9/2014 7:35 PM

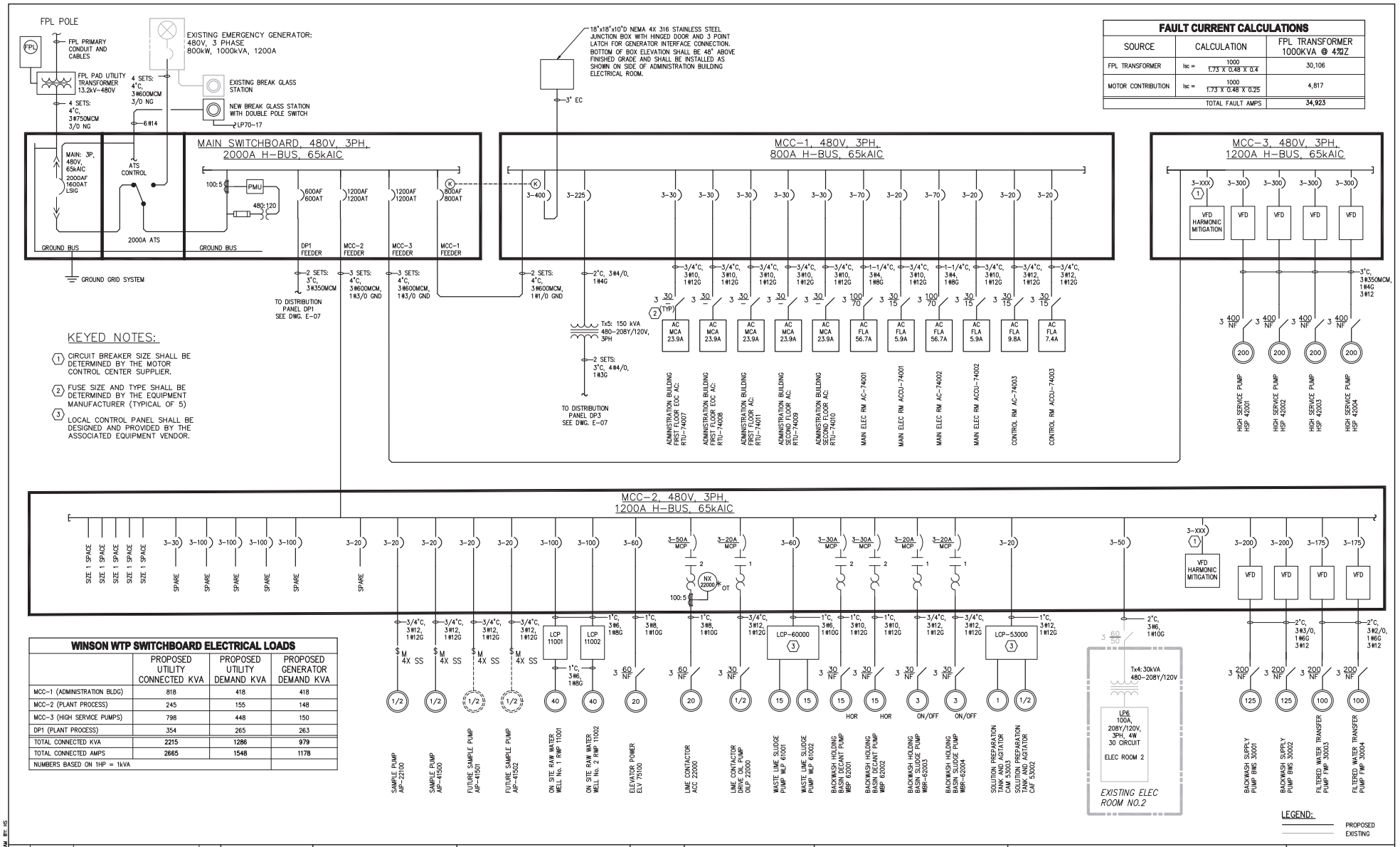

KEYED NOTES:

1. CIRCUIT BREAKER SIZE SHALL BE DETERMINED BY THE MOTOR CONTROL CENTER SUPPLIER.
2. FUSE SIZE AND TYPE SHALL BE DETERMINED BY THE EQUIPMENT MANUFACTURER (TYPICAL OF 5)
3. LOCAL CONTROL PANEL SHALL BE DESIGNED AND PROVIDED BY THE ASSOCIATED EQUIPMENT VENDOR.

FAULT CURRENT CALCULATIONS

SOURCE	CALCULATION	FPL TRANSFORMER 1000KVA @ 4%IZ
FPL TRANSFORMER	Isc = 1000 / 1.73 X 0.48 X 0.4	30,106
MOTOR CONTRIBUTION	Isc = 1000 / 1.73 X 0.48 X 0.25	4,817
	TOTAL FAULT AMPS	34,923

WINSON WTP SWITCHBOARD ELECTRICAL LOADS

	PROPOSED UTILITY CONNECTED KVA	PROPOSED UTILITY DEMAND KVA	PROPOSED GENERATOR DEMAND KVA
MCC–1 (ADMINISTRATION BLDG)	818	418	418
MCC–2 (PLANT PROCESS)	245	155	148
MCC–3 (HIGH SERVICE PUMPS)	798	448	150
DP1 (PLANT PROCESS)	354	265	263
TOTAL CONNECTED KVA	**2215**	**1286**	**979**
TOTAL CONNECTED AMPS	**2665**	**1548**	**1178**
NUMBERS BASED ON 1HP = 1kVA			

NO.	DATE	ISSUED FOR	BY
1	4–1–14	100% QA COMMENTS	H.J.V.

DESIGNED J.M.B.
DRAWN J.M.B.
CHECKED J.C.B.
PROJ. ENGR. J.C.B.

JOHN C. BURKE P.E. No. 17301

HAZEN AND SAWYER
Environmental Engineers & Scientists
4000 Hollywood Boulevard, Suite 750N
Hollywood, Florida 33021
Certificate of Authorization Number: 2771

SCALE NTS

CLIENTS PROJECT: –
ENGINEERS PROJECT: 44238–004
CAD REFERENCE: 44238–004BP3–E06

NORTH MIAMI FLORIDA
CITY OF NORTH MIAMI
PUBLIC WORKS UTILITIES

WINSON WATER TREATMENT PLANT
BID PACKAGE 3: WTP REHABILITATION
PROPOSED FACILITY SINGLE LINE DIAGRAM
SHEET 1 OF 2

DATE: JUNE 2014
SHEET: 245 OF 335
DRAWING: E–06

PERMITTING

PLOT DATE: 6/10/2014 11:56 AM BY: HS
XREFs= ..\Tblock\44238–004–BP3–TB
File = H:\44238–004\Drawings\Bid Package 3 – WTP Rehab\Electrical\44238–004BP3–E06 Saved by jbrood Save date = 6/9/2014 5:04 PM

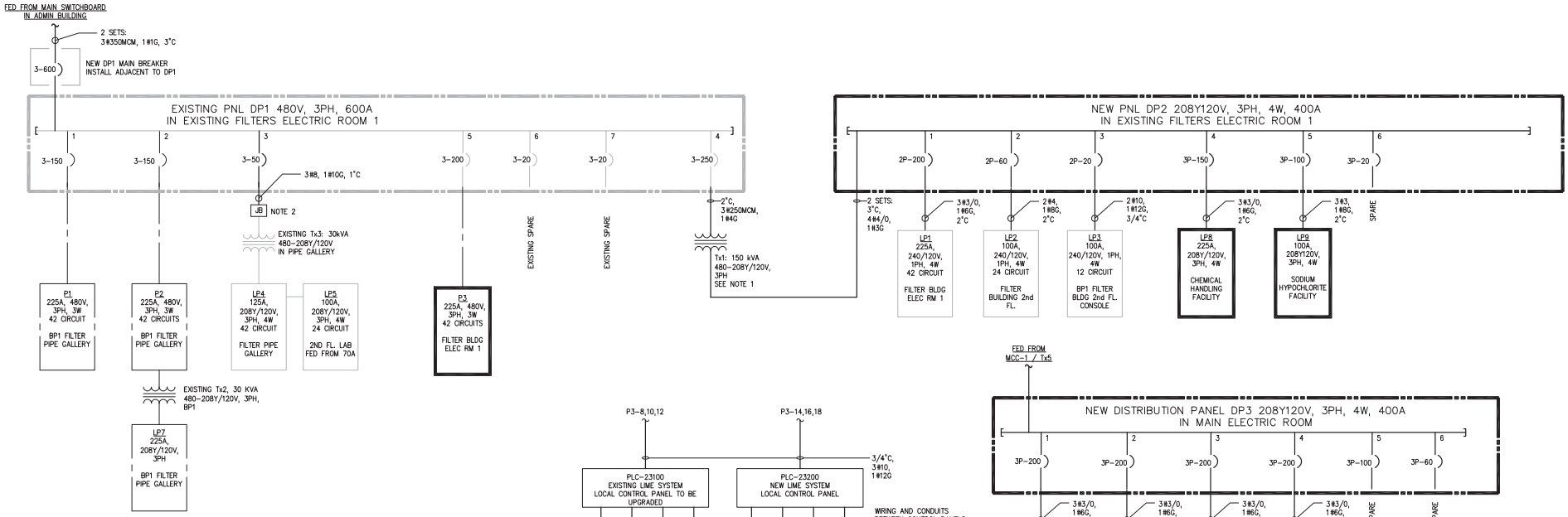

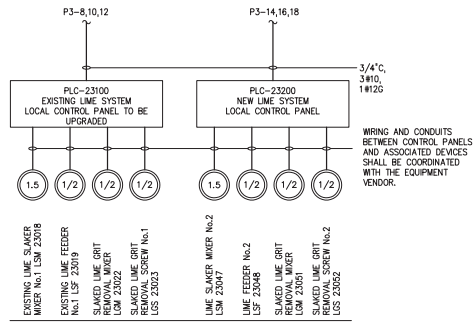

CONTRACTOR SHALL REWIRE EXISTING EQUIPMENT AS REQUIRED AND COORDINATED WITH THE EQUIPMENT VENDOR. NOT ALL EQUIPMENT SHOWN. CONTRACTOR SHALL VERIFY WITH THE VENDOR FOR ALL POWER WIRING AND CONTROL REQUIREMENTS.

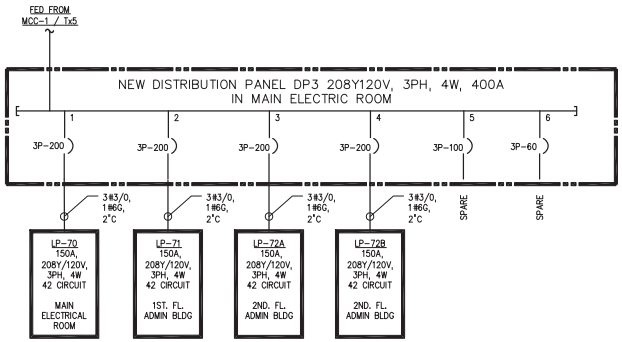

ADMINISTRATION BUILDING PANELBOARDS

PANELBOARD SCHEDULE

ID TAG	FED FROM	DESCRIPTION	VOLTS	PHASE	AMPS	CIRCUITS
DP1	MAIN SWBD	EXISTING IN FILTER BUILDING 1ST FLOOR ELEC RM 1	480	3	600	30
LP4	DP1 / Tx3	EXISTING IN FILTER BUILDING PIPE GALLERY	208Y120	3	125	42
LP5	LP4	EXISTING IN FILTER BUILDING 2ND FLOOR LAB	240/120	1	70	24
P1	DP1	EXISTING (BP1) IN FILTER BUILDING PIPE GALLERY	480	3	150	42
P2	DP1	EXISTING (BP1) IN FILTER BUILDING PIPE GALLERY	480	3	150	42
LP7	P2	EXISTING (BP1) IN FILTER BUILDING PIPE GALLERY	208Y120	3	100	42
P3	DP1	FILTER BUILDING ELEC RM 1	480	3	225	42
DP2	DP1 / Tx1	208Y/120V, 3PH, 4W DISTRIBUTION PANEL	208Y120	3	400	24
LP1	DP2	EXISTING IN FILTER BUILDING 1ST FLOOR ELEC RM 1	240/120	1	150	42
LP2	DP2	EXISTING IN FILTER BUILDING 2ND FLOOR CONT. RM	240/120	1	50	24
LP3	DP2	EXISTING IN FILTER BUILDING 2ND FLOOR CONSOLE	240/120	1	20	12
LP8	DP2	FILTER BUILDING CHEMICAL HANDLING FACILITY	208Y120	3	150	42
LP9	DP2	SODIUM HYPOCHLORITE FACILITY	208Y120	3	100	30
DP3	MCC-1	208Y/120V, 3PH, 4W DISTRIBUTION PANEL	208Y120	3	400	24
LP70	DP3	ADMIN BLDG, MAIN ELEC ROOM	208Y120	3	225	42
LP71	DP3	ADMIN BLDG, FIRST FLOOR ELECTRICAL LOADS	208Y120	3	225	42
LP72A	DP3	ADMIN BLDG, SECOND FLOOR ELECTRICAL LOADS	208Y120	3	225	42
LP72B	DP3	ADMIN BLDG, SECOND FLOOR CONTROL RM AND LAB	208Y120	3	225	42
LP6	MCC-2 / Tx4	EXISTING ELECTRICAL ROOM 2	208Y120	3	100	30

DRY TYPE TRANSFORMER SCHEDULE

ID	RATING	FED FROM	LOAD	PROJECT
Tx1 NEW	150 kVA, 480-208Y/120V, 3PH	PANEL DP1	DISTRIBUTION PANEL DP2	BP3
Tx2 EXIST	30 kVA, 480-208Y/120V, 3PH	PANEL P2	PANEL LP7	BP3
Tx3 EXIST	30 kVA, 480-240/120V, 3PH	PANEL DP1	PANELS LP4	EXISTING
Tx4 EXIST	30 kVA, 480-240/120V, 3PH	MCC-2	PANEL LP6	EXISTING TO BE RE-FED
Tx5 NEW	150 kVA, 480-208Y/120V, 3PH	MCC-1	DISTRIBUTION PANEL DP3	BP3

NOTES:

1. REPLACE EXISTING TRANSFORMER LOCATED WITHIN THE EXISTING SWITCHGEAR WITH NEW EXTERNAL TRANSFORMER
2. BREAK EXISTING FEED IN ELECTRIC ROOM 1, PROVIDE AND INSTALL A NEW J-BOX, CONDUIT, AND WIRING TO DP1.

LEGEND:

—— – —— INSTALLED IN BP1

NO.	DATE	ISSUED FOR	BY
1	4-1-14	100% QA COMMENTS	H.J.V.

DESIGNED J.M.B.
DRAWN L.M.S.
CHECKED J.C.B.
PROJ. ENGR. J.C.B.

JOHN C. BURKE P.E.
No. 17301

HAZEN AND SAWYER
Environmental Engineers & Scientists
4000 Hollywood Boulevard, Suite 750N
Hollywood, Florida 33021
Certificate of Authorization Number: 2771

SCALE NTS

CLIENTS PROJECT: –
ENGINEERS PROJECT: 44238-004
CAD REFERENCE: 44238-004BP3-E07

NORTH MIAMI FLORIDA
CITY OF NORTH MIAMI
PUBLIC WORKS UTILITIES

WINSON WATER TREATMENT PLANT
BID PACKAGE 3: WTP REHABILITATION
PROPOSED FACILITY SINGLE LINE DIAGRAM
SHEET 2 OF 2

DATE: JUNE 2014
SHEET: 246 OF 335
DRAWING: E-07

PERMITTING

PLOT DATE: 6/10/2014 11:57 AM BY: JS
XREFs= ..\Tblock\44238-004-BP3-TB
File = H:\44238-004\Drawings\Bid Package 3 - WTP Rehab\Electrical\44238-004BP3-E07 Saved by jbrood Save date = 6/9/2014 7:14 PM

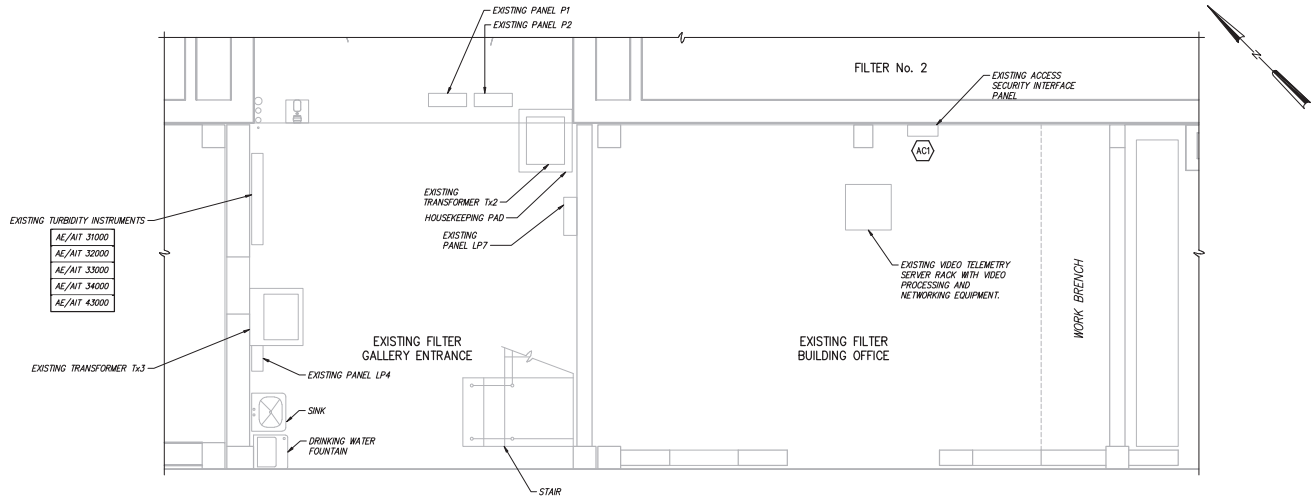

EXISTING CONDITION
3/8" = 1'-0"

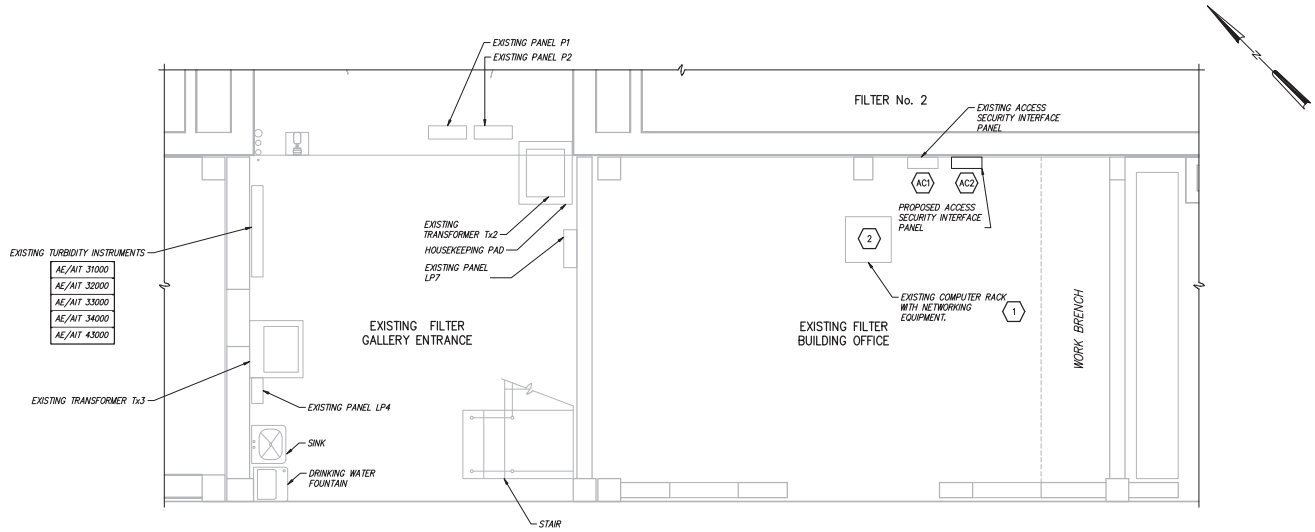

PROPOSED CONDITION
3/8" = 1'-0"

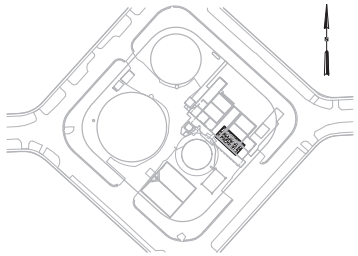

LOCATION MAP

KEYED NOTES:

1. SECURITY SYSTEM SUPPLIER TO MODIFY EQUIPMENT AS NEEDED TO INTERFACE WITH NEW SECURITY EQUIPMENT TO BE LOCATED IN THE PROPOSED ADMINISTRATION BUILDING.
2. CONTRACTOR SHALL PROVIDE AND INSTALL A 2 INCH MINIMUM RACEWAY AND FIBER OPTIC CABLE BETWEEN THIS EXISTING COMPUTER RACK AND THE NEW VIDEO EQUIPMENT COMPUTER RACK IN THE SECOND FLOOR CONTROL ROOM AT THE NEW ADMINISTRATION BUILDING.

LEGEND:

- AC1 EXISTING ACCESS CONTROL EQUIPMENT
- AC2 NEW ACCESS CONTROL EQUIPMENT IN EXISTING FILTER BUILDING

3/8"=1'-0"

12" 0 1 2 4'

NO.	DATE	ISSUED FOR	BY

DESIGNED J.M.B.
DRAWN G.P.B.
CHECKED J.C.B.
PROJ. ENGR. J.C.B.

JOHN C. BURKE P.E.
No. 17301

HAZEN AND SAWYER
Environmental Engineers & Scientists
4000 Hollywood Boulevard, Suite 750N
Hollywood, Florida 33021
Certificate of Authorization Number: 2771

SCALE 3/8"=1'-0"

CLIENTS PROJECT: –
ENGINEERS PROJECT: 44238-004
CAD REFERENCE: 44238-004BP3-E08

NORTH MIAMI FLORIDA
CITY OF NORTH MIAMI
PUBLIC WORKS UTILITIES

WINSON WATER TREATMENT PLANT
BID PACKAGE 3: WTP REHABILITATION
EXISTING FILTER BUILDING
FIRST FLOOR ELECTRICAL PLAN

DATE: JUNE 2014
SHEET: 247 OF 335
DRAWING: E-08

PERMITTING

PLOT DATE: 6/10/2014 11:59 AM BY: JS

XREFs= ..\Block\44238-004-BP3-TB,..\Base-BP3\S-BP1-Filters-Plan-Bottom-X,..\Base-BP3\M-BP1-Filters-Plan-Bottom-X

File = H:\44238-004\Drawings\Bid Package 3 - WTP Rehab\Electrical\44238-004BP3-E08 Saved by HScalf Save date = 6/9/2014 7:31 PM

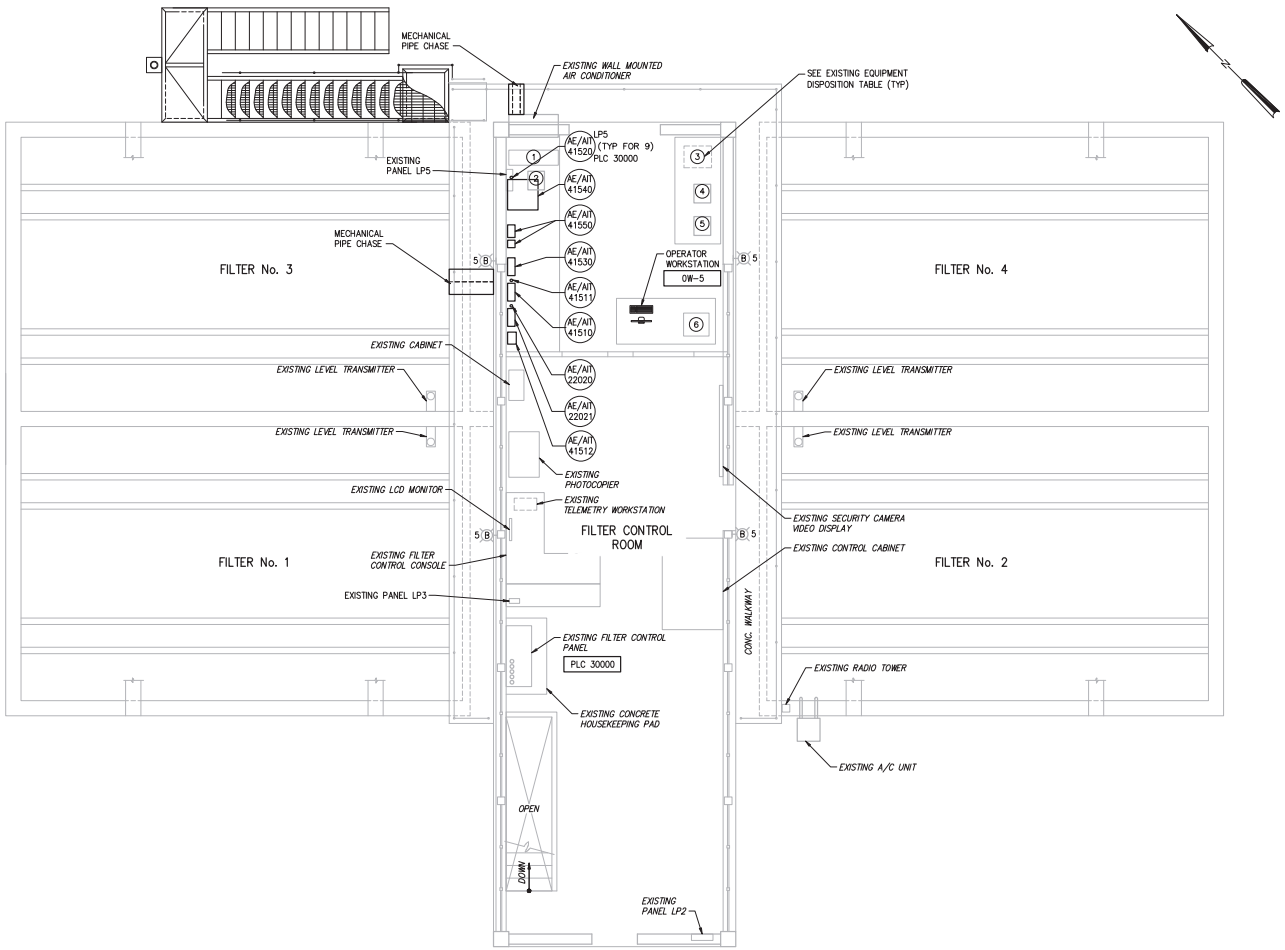

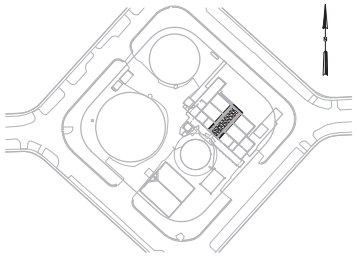

LOCATION MAP

INSTRUMENTATION POWER CIRCUITS		
ID	EQUIP DESCRIPTION	CIRCUIT
AE/AIT 41510	HSPS SUPPLY FREE CHLORINE ANALYZER	LP5-1
AE/AIT 41511	HSPS SUPPLY PH ANALYZER	LP5-7
AE/AIT 41512	HSPS SUPPLY FLUORIDE ANALYZER	LP5-9
AE/AIT 41520	HSPS DISCHARGE PH ANALYZER	LP5-11
AE/AIT 41530	HSPS DISCHARGE TOTAL CHLORINE ANALYZER	LP5-19
AE/AIT 41540	HSPS DISCHARGE CHLORAMINE ANALYZER	LP5-21
AE/AIT 41550	HSPS DISCHARGE TOTAL TURBIDITY ANALYZER	LP5-23
AE/AIT 22020	LIME CONTACTOR EFFLUENT PH ANALYZER	LP5-20
AE/AIT 22021	LIME CONTACTOR EFFLUENT FREE CHLORINE ANALYZER	LP5-21

EXISTING EQUIPMENT DISPOSITION		
ID	EQUIPMENT	DISPOSITION
1	AUTOCLAVE	RELOCATE TO NEW LAB
2	COLOR ANALYZER	RELOCATE TO NEW LAB
3	UNDER-COUNTER REFRIGATOR	RELOCATE TO NEW LAB
4	SPECTROPHOTOMETER	RELOCATE TO NEW LAB
5	TURBIDIMETER	RELOCATE TO NEW LAB
6	INCUBATOR	RELOCATE TO NEW LAB

GENERAL NOTES:

1. EXISTING ELECTRICAL EQUIPMENT WITHIN THE FILTER CONTROL ROOM ARE BASED UPON FIELD OBSERVATION.

LEGEND:

EXISTING

PROPOSED

TO BE REMOVED

1/4"=1'-0"

NO.	DATE	ISSUED FOR	BY
1	4-1-14	100% QA COMMENTS	H.J.V.

DESIGNED J.M.B.
DRAWN L.M.S.
CHECKED J.C.B.
PROJ. ENGR. J.C.B.

JOHN C. BURKE P.E.
No. 17301

HAZEN AND SAWYER
Environmental Engineers & Scientists
4000 Hollywood Boulevard, Suite 750N
Hollywood, Florida 33021
Certificate of Authorization Number: 2771

SCALE 1/4"=1'-0"

CLIENTS PROJECT: –
ENGINEERS PROJECT: 44238-004
CAD REFERENCE: 44238-004BP3-E09

CITY OF NORTH MIAMI
PUBLIC WORKS UTILITIES

WINSON WATER TREATMENT PLANT
BID PACKAGE 3: WTP REHABILITATION
EXISTING FILTER CONTROL ROOM ELECTRICAL PLAN

DATE: JUNE 2014
SHEET: 248 OF 335
DRAWING: E-09

PERMITTING

PLOT DATE: 6/10/2024 11:59 AM BY: HS

XREFs= ..\Base-BP3\S-BP1-Filters-Plan-Upper-X,..\Base-BP3\A-BP1-Filters-Plan-Upper-X,..\Base-BP3\S-BP1-Filters-Plan-Upper,..\Base-BP3\M-BP1-Filters-Plan-Upper-X,..\Tblock\44238-004-BP3-TB,..\Base-BP3\M-BP3-Filters-Plan-Top,..\Base-BP3\S-BP3-ChemHand-Plan

File = H:\44238-004\Drawings\Bid Package 3 - WTP Rehab\Electrical\44238-004BP3-E09 Saved by HScalf Save date = 6/9/2014 7:34 PM

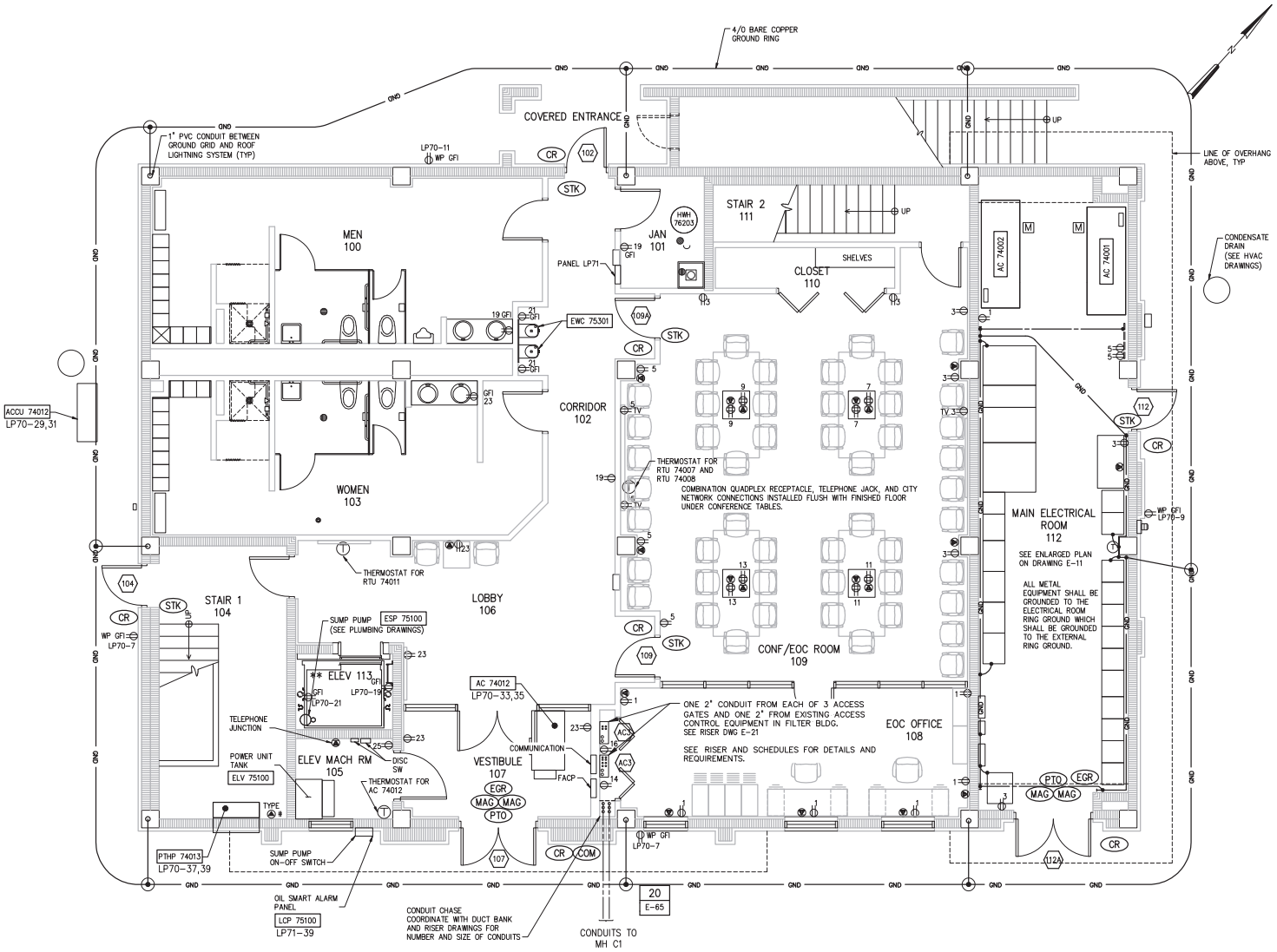

DOOR ACCESS CONTROL SCHEDULE

DOOR NO.	DOOR LOCK TYPE	CARD READER	EGRESS BUTTON
102	STK 78102	CR 78102	NA
104	STK 78104	CR 78104	NA
107	MAG 78107	CR 78107	PTO 78107
109	STK 78109	CR 78109	NA
109A	STK 78109A	CR 78109A	NA
112	STK 78112	CR 78112	NA
112A	MAG 78112A	CR 78112A	PTO 78112A

GENERAL NOTES:

1. ALL CIRCUIT NUMBERS ON THIS FLOOR ARE FROM PANEL LP71 UNLESS OTHERWISE NOTED.
2. ELECTRIC ROOM CIRCUITS ARE FROM LP70 UNLESS OTHERWISE NOTED.
3. RECEPTACLES MARKED "TV" SHALL HAVE THEIR INSTALLATION HEIGHT COORDINATED WITH THE ASSOCIATED TV SCREEN OR EQUIPMENT.
4. CONTRACTOR SHALL FURNISH AND INSTALL ALL CONDUIT AND CABLES REQUIRED FOR THE ELECTRONIC ACCESS CONTROL AND ALARM MONITORING (EACAM) SYSTEM SPECIFIED IN SECTION 16700.
5. (EACAM) SYSTEM VENDOR SHALL TERMINATE ALL ELECTRONIC ACCESS CONTROL AND ALARM MONITORING SYSTEM CABLES AT ALL EQUIPMENT.
6. THE ROOF MOUNTED LIGHTNING PROTECTION SYSTEM DOWNLEADS SHALL BE ROUTED THROUGH 1" PVC CONDUITS INSTALLED WITHIN THE COLUMNS AS INDICATED IN THIS DRAWING. SEE ADDITIONAL DETAILS ON ELECTRICAL DETAIL DRAWINGS.
7. ** CONTRACTOR SHALL COORDINATE ALL ELECTRICAL DEVICES, CONDUIT, AND WIRING WITH ELEVATOR EQUIPMENT CONTRACTOR.

HVAC NOTES:

1. THE ELECTRICAL CONTRACTOR SHALL FURNISH AND INSTALL ALL RACEWAYS FOR HVAC CONTROL AND MONITORING WIRING. REQUIREMENTS SHALL BE DETERMINED THROUGH COORDINATION BETWEEN ELECTRICAL AND HVAC CONTRACTORS.
2. ELECTRICAL CONTRACTOR SHALL FURNISH AND INSTALL A MINIMUM 200 LB TEST PULL LINE IN EACH EMPTY CONDUIT INSTALLED.
3. HVAC CONTRACTOR SHALL FURNISH AND INSTALL WIRING.

SECURITY ACCESS NOTES:

1. THE ELECTRICAL CONTRACTOR SHALL FURNISH AND INSTALL ALL RACEWAYS FOR SECURITY ACCESS CONTROL AND MONITORING WIRING. REQUIREMENTS SHALL BE DETERMINED THROUGH COORDINATION BETWEEN ELECTRICAL AND ACCESS CONTROL CONTRACTORS.
2. ELECTRICAL CONTRACTOR SHALL FURNISH AND INSTALL A MINIMUM 200 LB TEST PULL LINE IN EACH EMPTY CONDUIT INSTALLED.
3. ACCESS CONTROL CONTRACTOR SHALL FURNISH AND INSTALL WIRING.

NOTE:

CONTRACTOR SHALL PROCURE A NORTH MIAMI BUILDING DEPARTMENT TEMPORARY CERTIFICATE OF OCCUPANCY (TCO) FOR THE MAIN ELECTRICAL ROOM PORTION OF THE PROPOSED ADMINISTRATION BUILDING, OR AS A SEPARATE ENTITY FROM THE ADMINISTRATION STRUCTURE. THIS TCO IS REQUIRED SO THAT THE MASTER PUMP STATION CAN BE PLACED IN OPERATION WITH REQUISITE VFDs AND SUPPORT ELECTRICAL / INSTRUMENTATION ITEMS THAT ARE HOUSED IN THE NEW MAIN ELECTRICAL ROOM.

SECURITY ACCESS DEVICES LEGEND

- (100) DOOR NUMBER
- (MAG) MAGNETIC DOOR LOCK
- (STK) ELECTRIC STRIKE IN DOOR FRAME
- (CR) CARD READER
- (PTO) EGRESS BUTTON
- (COM) INTERCOM
- (EGR) EGRESS MOTION DETECTOR
- (AC3) NEW ACCESS CONTROL EQUIPMENT IN ADMINISTRATION BUILDING

1/4"=1'-0"

NO.	DATE	ISSUED FOR	BY

DESIGNED J.M.B.
DRAWN L.M.S.
CHECKED J.C.B.
PROJ. ENGR. J.C.B.

JOHN C. BURKE P.E.
No. 17301

HAZEN AND SAWYER
Environmental Engineers & Scientists
4000 Hollywood Boulevard, Suite 750N
Hollywood, Florida 33021
Certificate of Authorization Number: 2771

SCALE 1/4"=1'-0"

CLIENTS PROJECT: –
ENGINEERS PROJECT: 44238-004
CAD REFERENCE: 44238-004BP3-E10

NORTH MIAMI FLORIDA
CITY OF NORTH MIAMI
PUBLIC WORKS UTILITIES

WINSON WATER TREATMENT PLANT
BID PACKAGE 3: WTP REHABILITATION
NEW ADMINISTRATION BUILDING
FIRST FLOOR PLAN

DATE: JUNE 2014
SHEET: 249 OF 335
DRAWING: E-10

PERMITTING

PLOT DATE: 6/10/2014 12:00 PM BY: IKS

XREFs= ..\Tblock\44238-004-BP3-TB,..\Base-BP3\A-BP3-Admin-Plan-Bottom,..\Base-BP3\A-BP3-Admin-Plan-Col-Grid,..\Base-BP3\E-BP3-Admin-Plan-Bottom,..\Base-BP3\H-BP3-Admin-Plan-Bottom,..\Base-BP3\P-BP3-Admin-Plan-Bottom,..\Base-BP3\M-BP3-WetPumpNo2-Plan,..\Base-BP3\A-BP3-Admin-Plan-Bottom-Furniture

File = H:\44238-004\Drawings\Bid Package 3 - WTP Rehab\Electrical\44238-004BP3-E10 Saved by jbrood Save date = 6/9/2014 8:51 PM

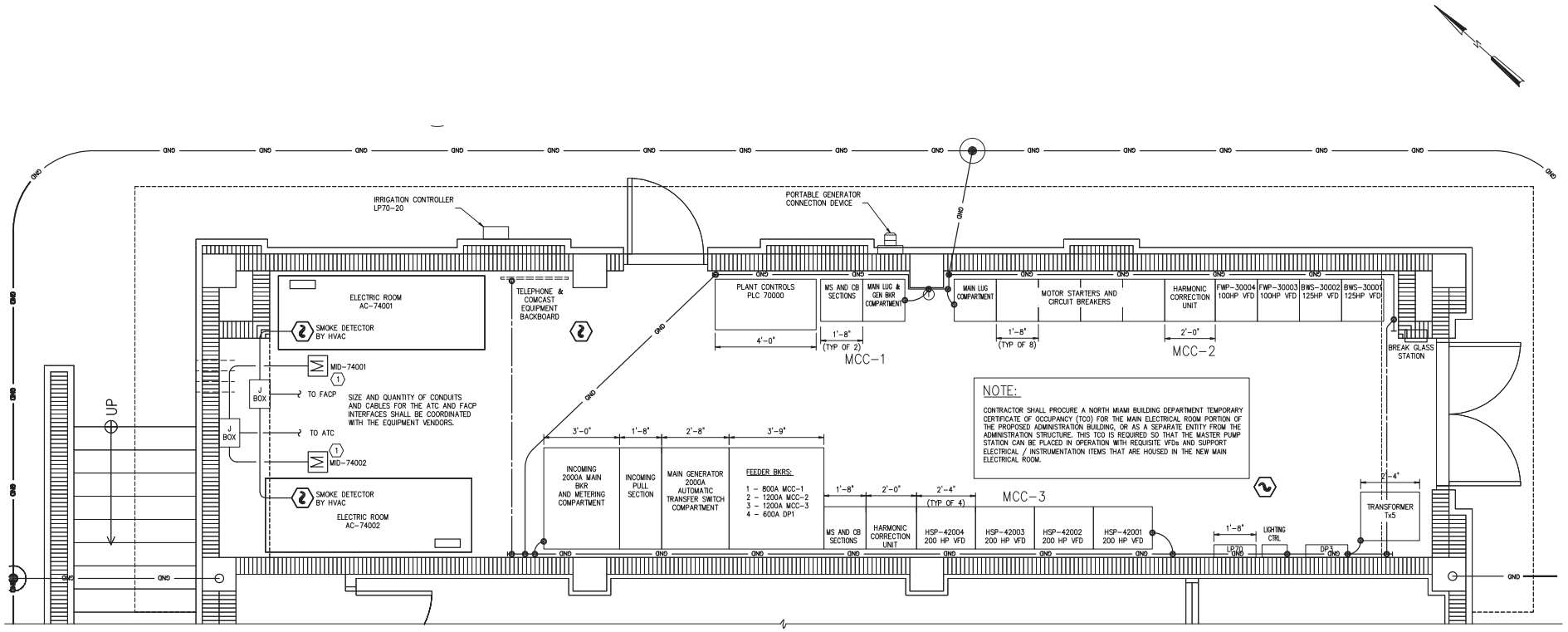

NOTE:

CONTRACTOR SHALL PROCURE A NORTH MIAMI BUILDING DEPARTMENT TEMPORARY CERTIFICATE OF OCCUPANCY (TCO) FOR THE MAIN ELECTRICAL ROOM PORTION OF THE PROPOSED ADMINISTRATION BUILDING, OR AS A SEPARATE ENTITY FROM THE ADMINISTRATION STRUCTURE. THIS TCO IS REQUIRED SO THAT THE MASTER PUMP STATION CAN BE PLACED IN OPERATION WITH REQUISITE VFDs AND SUPPORT ELECTRICAL / INSTRUMENTATION ITEMS THAT ARE HOUSED IN THE NEW MAIN ELECTRICAL ROOM.

KEYED NOTES:

(1) MOTORIZED ISOLATION DAMPER INTEGRAL TO HVAC EQUIPMENT. (SEE HVAC DRAWINGS)

MAIN ELECTRICAL ROOM PLAN

1/2" = 1'-0"

NOTES:

1. SEE ELECTRICAL SINGLE LINE DRAWING FOR EQUIPMENT NOT SHOWN ON THIS DRAWING.
2. SEE FIRE ALARM DRAWINGS FOR FIRE ALARM EQUIPMENT CONDUIT AND WIRING DETAILS.
3. IRRIGATION EQUIPMENT AND LOW VOLTAGE WIRING CONTROLLED WITH THE IRRIGATION CONTROLLER SHALL BE PROVIDED AND INSTALLED BY THE IRRIGATION CONTRACTOR

1/2"=1'-0"

NO.	DATE	ISSUED FOR	BY

DESIGNED J.M.B.
DRAWN L.M.S.
CHECKED J.C.B.
PROJ. ENGR. J.C.B.

JOHN C. BURKE P.E.
No. 17301

HAZEN AND SAWYER
Environmental Engineers & Scientists
4000 Hollywood Boulevard, Suite 750N
Hollywood, Florida 33021
Certificate of Authorization Number: 2771

SCALE 1/2"=1'-0"

CLIENTS PROJECT: –
ENGINEERS PROJECT: 44238-004
CAD REFERENCE: 44238-004BP3-E11

NORTH MIAMI FLORIDA
CITY OF NORTH MIAMI
PUBLIC WORKS UTILITIES

WINSON WATER TREATMENT PLANT
BID PACKAGE 3: WTP REHABILITATION
NEW ADMINISTRATION BUILDING
ELECTRICAL ROOM PLAN

DATE: JUNE 2014
SHEET: 250 OF 335
DRAWING: E-11

PERMITTING

PLOT DATE: 6/10/2014 12:01 PM BY: MS

XREFs= ..\Tblock\44238-004-BP3-TB,..\Base-BP3\A-BP3-Admin-Plan-Bottom,..\Base-BP3\A-BP3-Admin-Plan-Col-Grid,..\Base-BP3\E-BP3-Admin-Plan-Bottom,..\Base-BP3\H-BP3-Admin-Plan-Bottom,..\Base-BP3\P-BP3-Admin-Plan-Bottom

File = H:\44238-004\Drawings\Bid Package 3 - WTP Rehab\Electrical\44238-004BP3-E11 Saved by jbrood Save date = 6/9/2014 7:34 PM

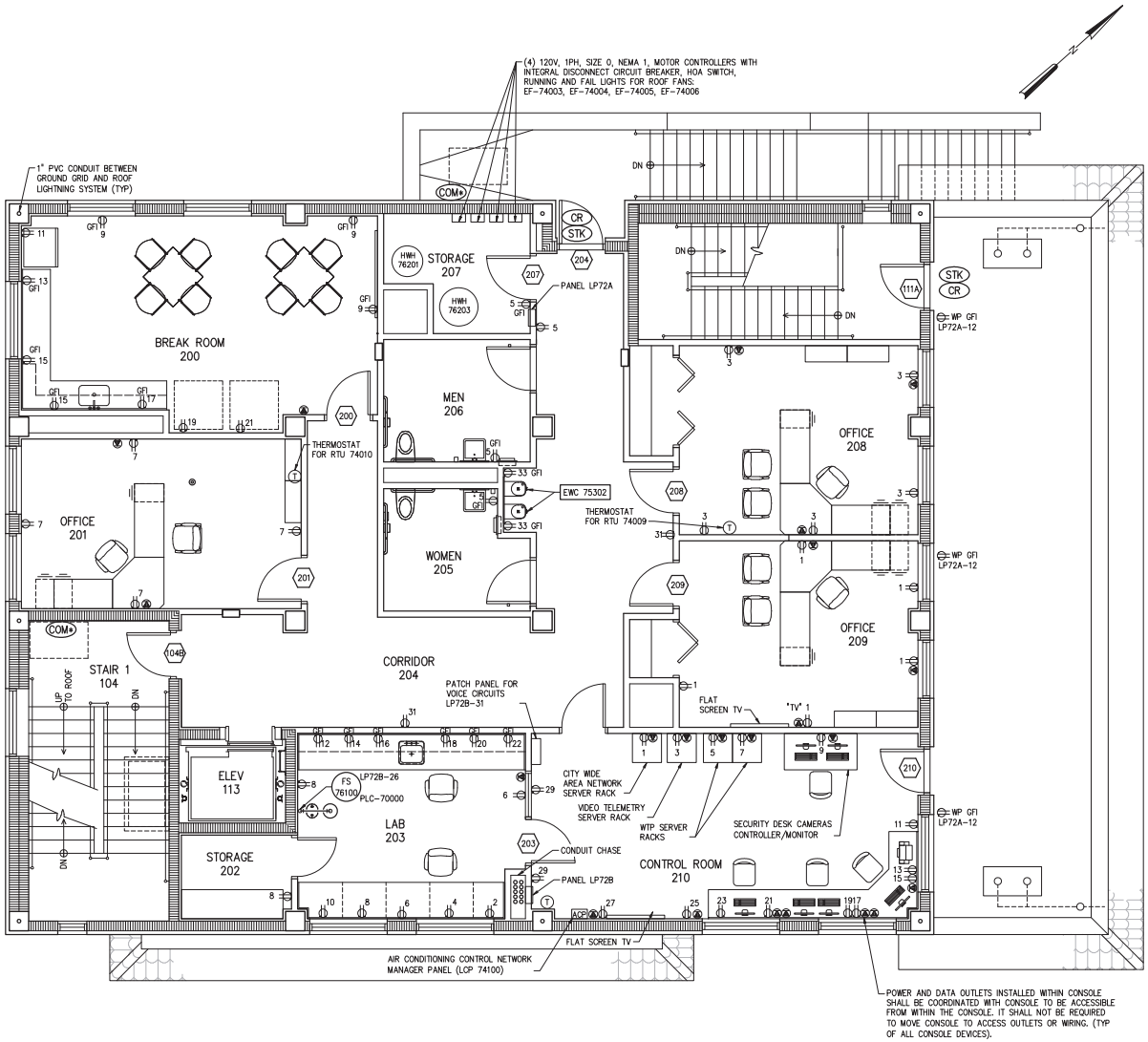

DOOR ACCESS CONTROL SCHEDULE

DOOR NO.	DOOR LOCK TYPE	CARD READER	EGRESS BUTTON
111A	STK 78111A	CR 78111A	NA
204	STK 78204	CR 78204	NA

GENERAL NOTES:

1. ALL CIRCUIT NUMBERS ON THIS FLOOR ARE FROM PANEL LP72A OR LP72B UNLESS OTHERWISE NOTED.
2. RECEPTACLES MARKED "TV" SHALL HAVE THEIR INSTALLATION HEIGHT COORDINATED WITH THE ASSOCIATED TV SCREEN OR EQUIPMENT.
3. CONTRACTOR SHALL FURNISH AND INSTALL ALL CONDUIT AND CABLES REQUIRED FOR THE ELECTRONIC ACCESS CONTROL AND ALARM MONITORING (EACAM) SYSTEM SPECIFIED IN SECTION 16700.
4. (EACAM) SYSTEM VENDOR SHALL TERMINATE ALL ELECTRONIC ACCESS CONTROL AND ALARM MONITORING SYSTEM CABLES AT ALL EQUIPMENT.
5. PANEL LP72B POWERS CIRCUITS IN ROOMS 202, 203 AND 210 ONLY. PANEL LP72A POWERS REMAINING SECOND FLOOR CIRCUITS.

HVAC NOTES:

1. THE ELECTRICAL CONTRACTOR SHALL FURNISH AND INSTALL ALL RACEWAYS FOR HVAC CONTROL AND MONITORING WIRING. REQUIREMENTS SHALL BE DETERMINED THROUGH COORDINATION BETWEEN ELECTRICAL AND HVAC CONTRACTORS.
2. ELECTRICAL CONTRACTOR SHALL FURNISH AND INSTALL A MINIMUM 200 LB TEST PULL LINE IN EACH EMPTY CONDUIT INSTALLED.
3. HVAC CONTRACTOR SHALL FURNISH AND INSTALL ALL CONTROL WIRING INTERCONNECTING THE HVAC EQUIPMENT.
4. HVAC CONTRACTOR SHALL TERMINATE ALL HVAC CONTROL AND SIGNAL WIRING.

SECURITY ACCESS DEVICES LEGEND

- (100) DOOR NUMBER
- (MAG) MAGNETIC DOOR LOCK
- (STK) ELECTRIC STRIKE IN DOOR FRAME
- (CR) CARD READER
- (PTO) EGRESS BUTTON
- (COM) INTERCOM
- (COM•) AREA OF REFUGE INTERCOM SEE FIRE ALARM SYSTEM FOR DETAILS
- (EGR) EGRESS MOTION DETECTOR

1/4"=1'-0"

NO.	DATE	ISSUED FOR	BY
1	4-1-14	100% QA COMMENTS	H.J.V.

DESIGNED J.M.B.
DRAWN J.M.B.
CHECKED J.C.B.
PROJ. ENGR. J.C.B.

JOHN C. BURKE P.E.
No. 17301

HAZEN AND SAWYER
Environmental Engineers & Scientists
4000 Hollywood Boulevard, Suite 750N
Hollywood, Florida 33021
Certificate of Authorization Number: 2771

SCALE 1/4"=1'0"

CLIENTS PROJECT: –
ENGINEERS PROJECT: 44238-004
CAD REFERENCE: 44238-004BP3-E12

CITY OF NORTH MIAMI
PUBLIC WORKS UTILITIES

WINSON WATER TREATMENT PLANT
BID PACKAGE 3: WTP REHABILITATION
NEW ADMINISTRATION BUILDING
SECOND FLOOR PLAN

DATE: JUNE 2014
SHEET: 251 OF 335
DRAWING: E-12

PERMITTING

PLOT DATE: 6/10/2014 12:53 PM BY: HS

XREFs= ..\Tblock\44238-004-BP3-TB,..\Base-BP3\A-BP3-Admin-Plan-Top-Furniture,..\Base-BP3\A-BP3-Admin-Plan-Top

File = H:\44238-004\Drawings\Bid Package 3 - WTP Rehab\Electrical\44238-004BP3-E12 Saved by jbroad Save date = 6/9/2014 8:55 PM

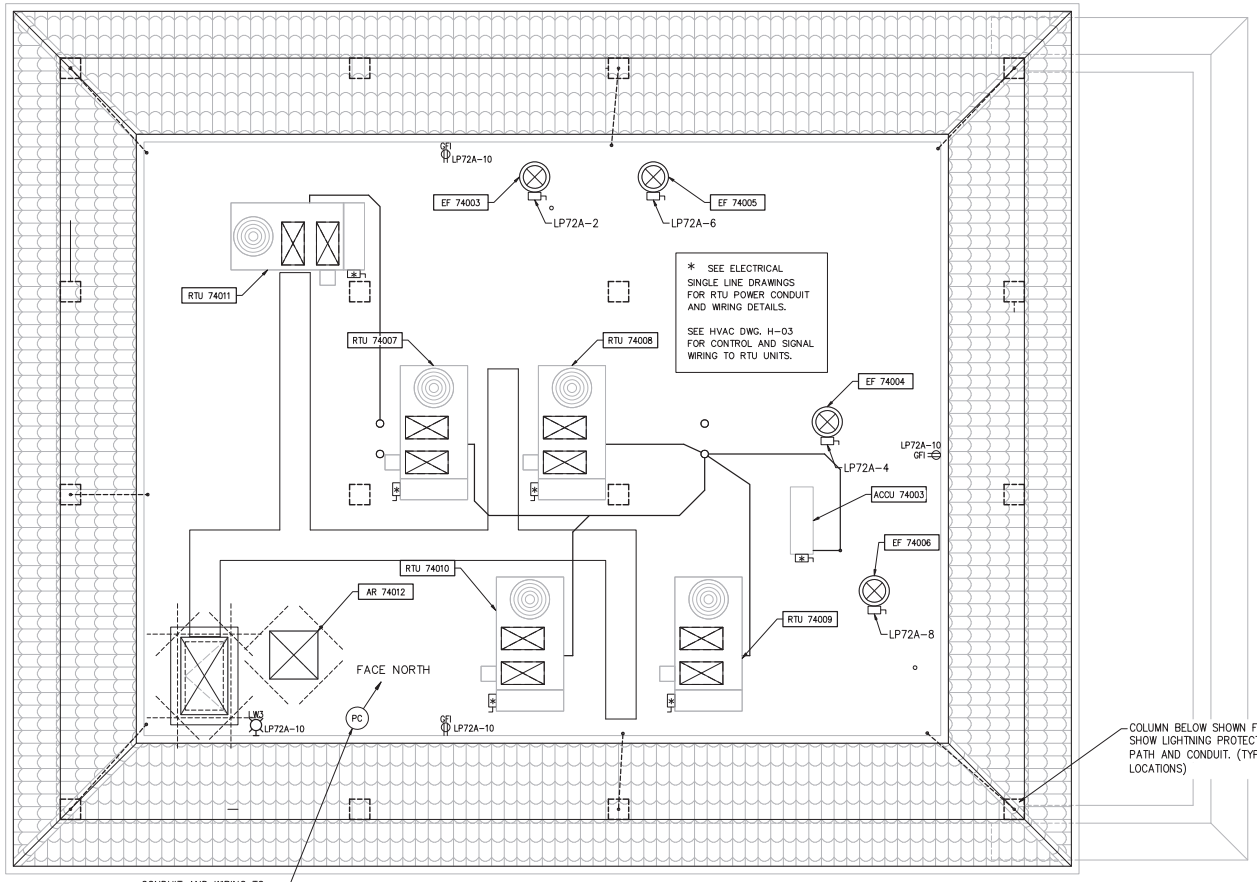

NOTES:
1. SEE ELECTRICAL DETAILS ON DRAWING E-68 FOR LIGHTNING SYSTEM DOWNLEADS CONDUIT AND WIRING DETAILS.

COLUMN BELOW SHOWN FOR REFERENCE TO SHOW LIGHTNING PROTECTION DOWN LEAD PATH AND CONDUIT. (TYPICAL AT 7 COLUMN LOCATIONS)

CONDUIT AND WIRING TO LIGHTING CONTROLLER IN THE MAIN ELECTRIC ROOM

ROOF PLAN
1/4" = 1'-0"

1/4"=1'-0"

NO.	DATE	ISSUED FOR	BY

DESIGNED J.M.B.
DRAWN G.P.B.
CHECKED J.C.B.
PROJ. ENGR. J.C.B.

JOHN C. BURKE P.E.
No. 17301

HAZEN AND SAWYER
Environmental Engineers & Scientists
4000 Hollywood Boulevard, Suite 750N
Hollywood, Florida 33021
Certificate of Authorization Number: 2771

SCALE 1/4" = 1'-0"

CLIENTS PROJECT: –
ENGINEERS PROJECT: 44238-004
CAD REFERENCE: 44238-004BP3-E13

NORTH MIAMI FLORIDA
CITY OF NORTH MIAMI
PUBLIC WORKS UTILITIES

WINSON WATER TREATMENT PLANT
BID PACKAGE 3: WTP REHABILITATION
NEW ADMINISTRATION BUILDING
ROOF POWER

DATE: JUNE 2014
SHEET: 252 OF 335
DRAWING: E-13

PERMITTING

PLOT DATE: 6/10/2014 12:04 PM BY: IKS

XREFs= ..\Tblock\44238-004-BP3-TB,..\Base-BP3\H-BP3-Admin-Plan-Roof,..\Base-BP3\A-BP3-Admin-Plan-Roof,..\Base-BP3\S-BP3-Admin-Plan-Roof

File = H:\44238-004\Drawings\Bid Package 3 - WTP Rehab\Electrical\44238-004BP3-E13 Saved by jbrood Save date = 6/9/2014 6:56 PM

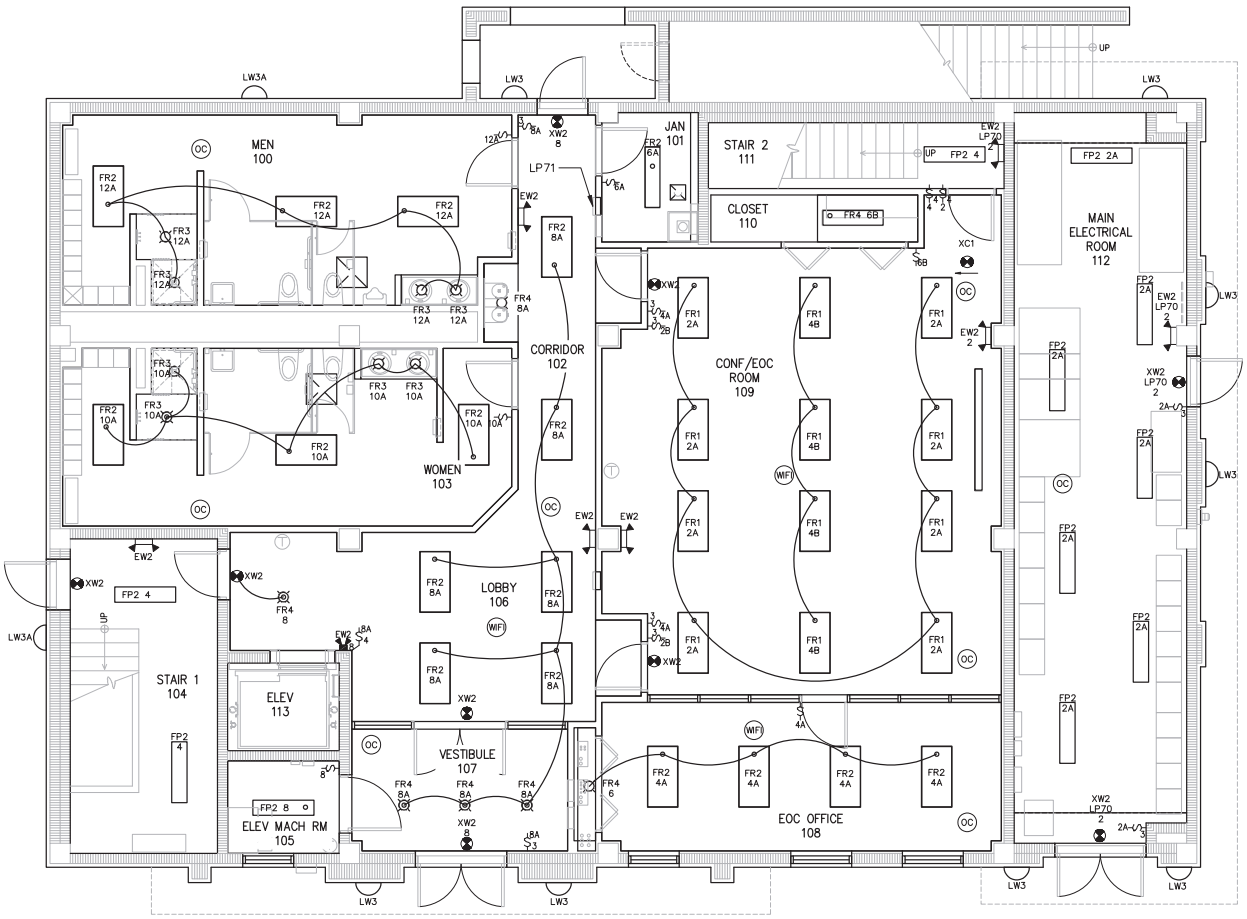

FIRST FLOOR LIGHTING
1/4" = 1'-0"

NOTES:

1. SEE LIGHTING SCHEDULE IN SPECIFICATION SECTION 16500 FOR FIXTURE DETAILS
2. CONDUIT AND WIRE ROUTING SHOWN FOR EXAMPLE ONLY. CONTRACTOR SHALL DETERMINE ACTUAL ROUTING.
3. FP2 FIXTURES IN ELECTRICAL ROOM TO BE MOUNTED 9'-0" ABOVE FINISHED FLOOR.
4. PROVIDE LIGHT AND SWITCH IN ELEVATOR PIT. COORDINATE REQUIREMENT WITH ELEVATOR MFR.
5. LIGHT FIXTURE CONNECTIONS DEPICT PROPOSED SWITCHING ARRANGEMENTS FROM THE ASSOCIATED LIGHT SWITCH OR OCCUPANCY CONTROL UNIT.
6. LIGHTING IN ELECTRICAL ROOM 112 SHALL BE FROM PANEL LP70.
7. ELECTRICAL ROOM 112 EMERGENCY FIXTURES SHALL BE ON SAME LIGHTING CIRCUIT AS ROOM LIGHTS BUT SHALL NOT BE SWITCHED AND SHALL BE POWERED FULL TIME.
8. INTERIOR EMERGENCY LIGHTING FIXTURES SHALL BE POWERED FROM THE SAME ROOM LIGHTING CIRCUIT WHERE THE EMERGENCY FIXTURE IS INSTALLED, BUT SHALL NOT BE SWITCHED.
9. SEE SITE LIGHTING CONTROL ON DRAWING E-55 FOR ADMINISTRATION BUILDING OUTSIDE WALL LIGHTING.

LEGEND:

(WIF) APPROXIMATE LOCATION FOR CEILING MOUNTED WIFI EQUIPMENT. CONTRACTOR SHALL PROVIDE AND INSTALL A 3/4" CONDUIT BETWEEN EACH DEVICE AND THE CITY WIDE NETWORK SERVER IN THE SECOND FLOOR CONTROL ROOM.

(OC) APPROXIMATE LOCATION FOR CEILING MOUNTED LIGHTING OCCUPANCY SENSORS. CONTRACTOR SHALL PROVIDE AND INSTALL 3/4" CONDUIT AND SYSTEM REQUIRED WIRING INTERCONNECTING THE SENSORS TO THE ASSOCIATED ROOM LIGHTING CONTROLS. SEE DRAWING E-55 FOR A SAMPLE SCHEMATIC. CONTRACTOR SHALL COORDINATE WIRING WITH ACTUAL SUPPLIED EQUIPMENT SCHEMATIC.

LP72A-39A
- LP72A — PANEL
- 3 — CIRCUIT #
- 9 — ASSOCIATED FIXTURE
- A — LIGHTING SWITCH DESIGNATION

LW3 — FIXTURE TYPE
LP72A — PANEL
12A — CIRCUIT # / ASSOCIATED FIXTURE GROUP

1/4"=1'-0" 1 0 1 2 3 7'

NO.	DATE	ISSUED FOR	BY
1	4-1-14	100% QA COMMENTS	H.J.V.

DESIGNED J.M.B.
DRAWN G.P.B.
CHECKED J.C.B.
PROJ. ENGR. J.C.B.

JOHN C. BURKE P.E.
No. 17301

HAZEN AND SAWYER
Environmental Engineers & Scientists
4000 Hollywood Boulevard, Suite 750N
Hollywood, Florida 33021
Certificate of Authorization Number: 2771

SCALE 1/4"=1'-0"

CLIENTS PROJECT: –
ENGINEERS PROJECT: 44238-004
CAD REFERENCE: 44238-004BP3-E14

NORTH MIAMI FLORIDA
CITY OF NORTH MIAMI
PUBLIC WORKS UTILITIES

WINSON WATER TREATMENT PLANT
BID PACKAGE 3: WTP REHABILITATION
NEW ADMINISTRATION BUILDING
FIRST FLOOR LIGHTING

DATE: JUNE 2014
SHEET: 253 OF 335
DRAWING: E-14

PERMITTING

PLOT DATE: 6/10/2014 12:05 PM BY: HS

XREFs= ..\Block\44238-004-BP3-TB,..\Base-BP3\A-BP3-Admin-Plan-Bottom-Reflected-Ceiling,..\Base-BP3\A-BP3-Admin-Plan-Bottom,..\Base-BP3\A-BP3-Admin-Plan-Col-Grid,..\Base-BP3\H-BP3-Admin-Plan-Bottom,..\Base-BP3\E-BP3-Admin-Plan-Bottom

File = H:\44238-004\Drawings\Bid Package 3 - WTP Rehab\Electrical\44238-004BP3-E14 Saved by jbrood Save date = 6/9/2014 9:02 PM

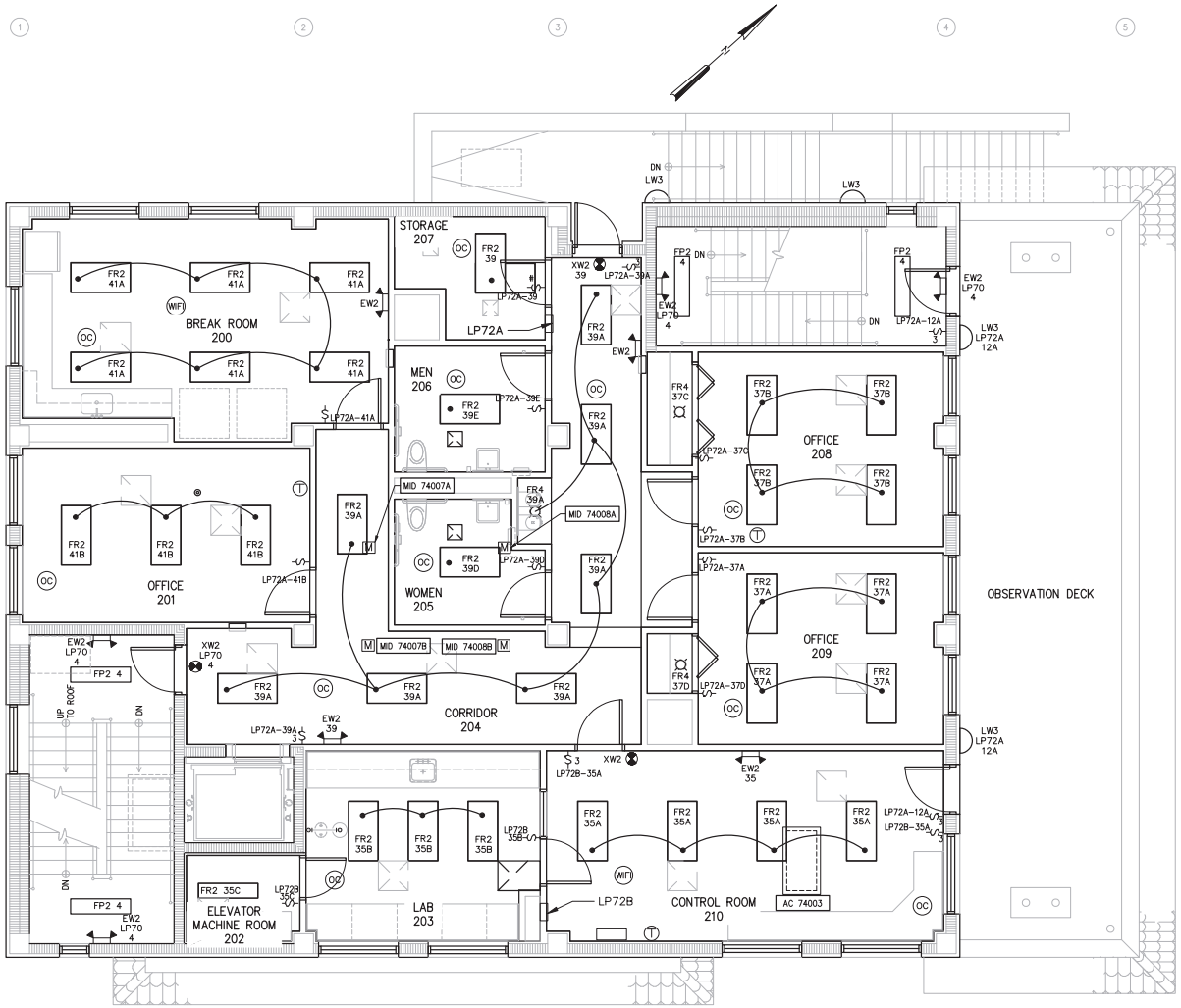

NOTES:

1. SEE LIGHTING SCHEDULE IN SPECIFICATION SECTION 16500 FOR FIXTURE DETAILS
2. CONDUIT AND WIRE ROUTING SHOWN FOR EXAMPLE ONLY. CONTRACTOR SHALL DETERMINE ACTUAL ROUTING.
3. LIGHT FIXTURE CONNECTIONS DEPICT PROPOSED SWITCHING ARRANGEMENTS FROM THE ASSOCIATED LIGHT SWITCH OR OCCUPANCY CONTROL UNIT.
4. SEE SITE LIGHTING CONTROL ON DRAWING E-55 FOR ADMINISTRATION BUILDING OUTSIDE WALL LIGHTING.

LEGEND:

(WIF) APPROXIMATE LOCATION FOR CEILING MOUNTED WIFI EQUIPMENT. CONTRACTOR SHALL PROVIDE AND INSTALL A 3/4" CONDUIT BETWEEN EACH DEVICE AND THE CITY WIDE NETWORK SERVER IN THE SECOND FLOOR CONTROL ROOM.

(OC) APPROXIMATE LOCATION FOR CEILING MOUNTED LIGHTING OCCUPANCY SENSORS. CONTRACTOR SHALL PROVIDE AND INSTALL 3/4" CONDUIT AND SYSTEM REQUIRED WIRING INTERCONNECTING THE SENSORS TO THE ASSOCIATED ROOM LIGHTING CONTROLS. SEE DRAWING E-55 FOR A SAMPLE SCHEMATIC. CONTRACTOR SHALL COORDINATE WIRING WITH ACTUAL SUPPLIED EQUIPMENT SCHEMATIC.

LP72A-39A — LIGHTING SWITCH DESIGNATION
- 39 — ASSOCIATED FIXTURE
- A — CIRCUIT #
- LP72 — PANEL

LW3 — FIXTURE TYPE
LP72A — PANEL
12A — CIRCUIT # / ASSOCIATED FIXTURE GROUP

SECOND FLOOR LIGHTING

1/4" = 1'-0"

1/4"=1'-0"

NO.	DATE	ISSUED FOR	BY
1	4-1-14	100% QA COMMENTS	H.J.V.

DESIGNED J.M.B.
DRAWN G.P.B.
CHECKED J.C.B.
PROJ. ENGR. J.C.B.

JOHN C. BURKE P.E. No. 17301

HAZEN AND SAWYER
Environmental Engineers & Scientists
4000 Hollywood Boulevard, Suite 750N
Hollywood, Florida 33021
Certificate of Authorization Number: 2771

SCALE 1/4"=1'-0"

CLIENTS PROJECT: –
ENGINEERS PROJECT: 44238-004
CAD REFERENCE: 44238-004BP3-E15

NORTH MIAMI FLORIDA — CITY OF NORTH MIAMI PUBLIC WORKS UTILITIES

WINSON WATER TREATMENT PLANT
BID PACKAGE 3: WTP REHABILITATION
NEW ADMINISTRATION BUILDING
SECOND FLOOR LIGHTING

DATE: JUNE 2014
SHEET: 254 OF 335
DRAWING: E-15

PERMITTING

PLOT DATE: 6/10/2014 12:06 PM BY: KS

XREFs= ..\Tblock\44238-004-BP3-TB,..\Base-BP3\A-BP3-Admin-Plan-Col-Grid,..\Base-BP3\A-BP3-Admin-Plan-Top,..\Base-BP3\A-BP3-Admin-Plan-Top-Reflected-Ceiling,..\Base-BP3\H-BP3-Admin-Plan-Top

File = H:\44238-004\Drawings\Bid Package 3 - WTP Rehab\Electrical\44238-004BP3-E15 Saved by jbroad Save date = 6/9/2014 7:10 PM

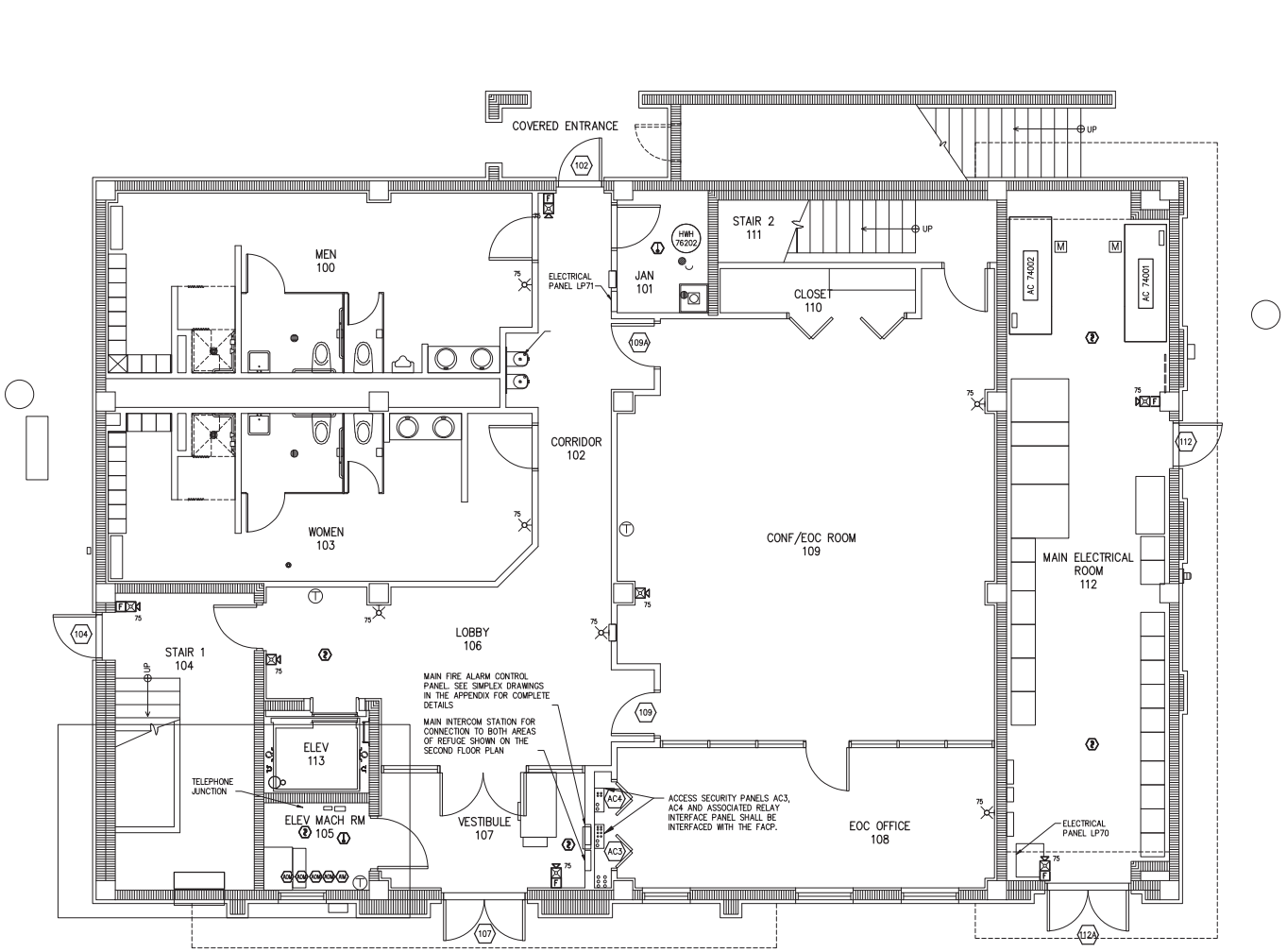

FIRST FLOOR FIRE ALARM SYSTEM

GENERAL NOTES:

1. DOORS NOT SHOWN FOR CLARITY
2. ALL CIRCUIT NUMBERS ON THIS FLOOR ARE FROM PANEL LP71 UNLESS OTHERWISE NOTED.
3. ELECTRIC ROOM CIRCUITS ARE FROM LP70 UNLESS OTHERWISE NOTED.

FIRE ALARM SYSTEM NOTES:

THE FIRE ALARM SYSTEM SHOWN IS FOR CONCEPTUAL PURPOSES ONLY. THE ACTUAL FIRE ALARM SYSTEM SHALL BE DESIGNED A BY THE VENDOR AS DESCRIBED IN THE SPECIFICATIONS.

SEE PROPOSED FIRE ALARM DRAWINGS BY THE VENDOR IN APPENDIX FOR DETAILS, CONDUIT ROUTING AND WIRING REQUIREMENTS.

AREA OF REFUGE NOTES:

AREA OF REFUGE 1 AND 2 SHOWN ON THE SECOND FLOOR PLAN SHALL HAVE COMMUNICATIONS (INTERCOM) BETWEEN THE AREA OF REFUGE AND THE MAIN COMMUNICATION PANEL ADJACENT TO THE FIRE ALARM CONTROL PANEL IN THE VESTIBULE.

(109) DOOR IDENTIFICATION NUMBER (TYP)

1/4"=1'-0"

NO.	DATE	ISSUED FOR	BY
1	4-1-14	100% QA COMMENTS	H.J.V.

PLOT DATE: 6/10/2014 12:07 PM BY: JKS

DESIGNED J.M.B.
DRAWN L.M.S.
CHECKED J.C.B.
PROJ. ENGR. J.C.B.

JOHN C. BURKE P.E.
No. 17301

HAZEN AND SAWYER
Environmental Engineers & Scientists
4000 Hollywood Boulevard, Suite 750N
Hollywood, Florida 33021
Certificate of Authorization Number: 2771

SCALE 1/4"=1'-0"

CLIENTS PROJECT: –
ENGINEERS PROJECT: 44238-004
CAD REFERENCE: 44238-004BP3-E16

NORTH MIAMI FLORIDA
CITY OF NORTH MIAMI
PUBLIC WORKS UTILITIES

WINSON WATER TREATMENT PLANT
BID PACKAGE 3: WTP REHABILITATION
NEW ADMINISTRATION BUILDING
FIRST FLOOR FIRE ALARM PLAN

DATE: JUNE 2014
SHEET: 255 OF 335
DRAWING: E-16

PERMITTING

File = H:\44238-004\Drawings\Bid Package 3 - WTP Rehab\Electrical\44238-004BP3-E16 Saved by jbrood Save date = 6/9/2014 8:08 PM

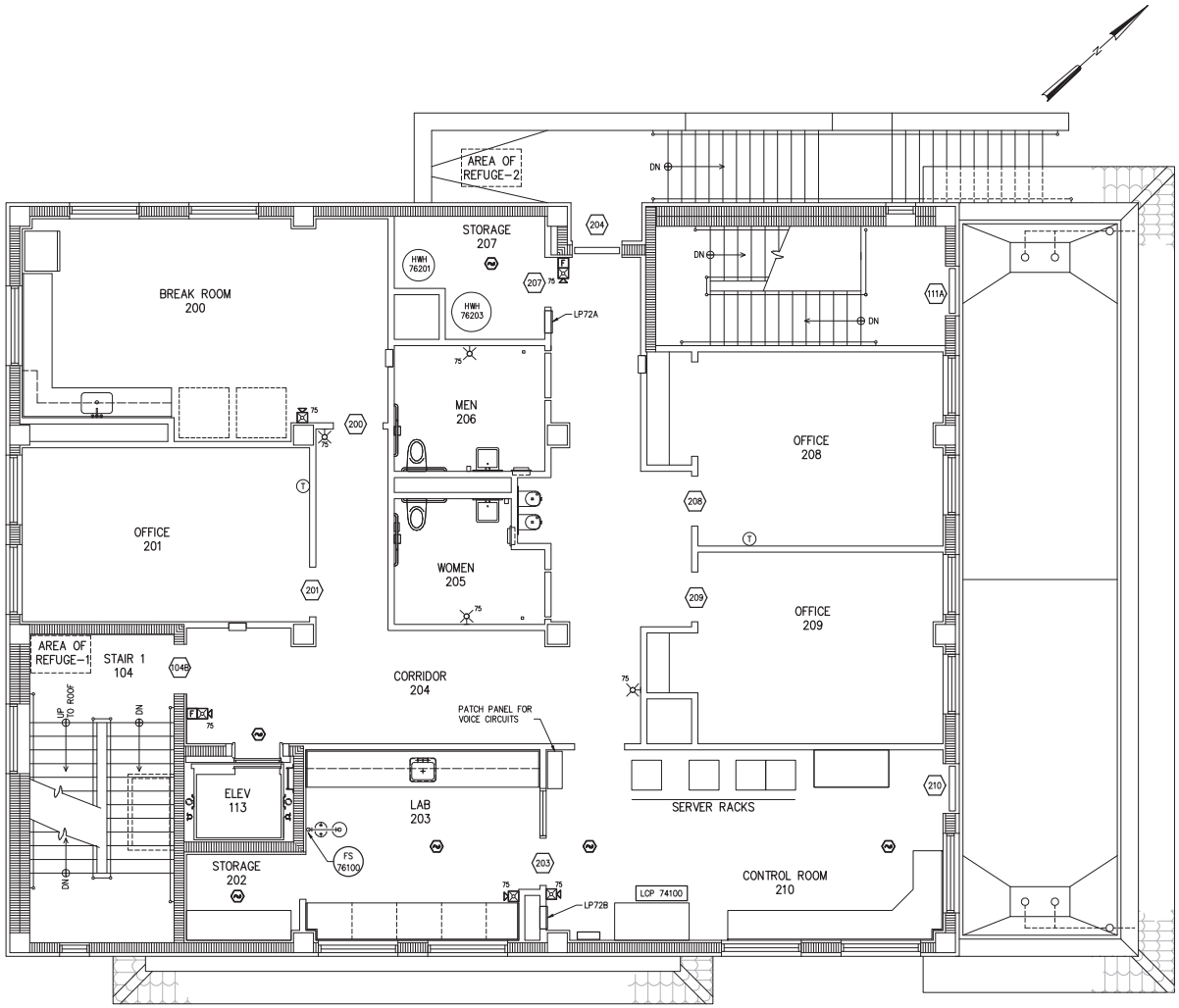

SECOND FLOOR FIRE ALARM SYSTEM

GENERAL NOTES:

1. DOORS NOT SHOWN FOR CLARITY
2. ALL CIRCUIT NUMBERS ON THIS FLOOR ARE FROM PANEL LP72A OR LP72B UNLESS OTHERWISE NOTED.

FIRE ALARM SYSTEM NOTES:

THE FIRE ALARM SYSTEM SHOWN IS FOR CONCEPTUAL PURPOSES ONLY. THE ACTUAL FIRE ALARM SYSTEM SHALL BE DESIGNED A BY THE VENDOR AS DESCRIBED IN THE SPECIFICATIONS.

SEE PROPOSED FIRE ALARM DRAWINGS BY THE VENDOR IN APPENDIX FOR DETAILS, CONDUIT ROUTING AND WIRING REQUIREMENTS.

AREA OF REFUGE NOTES:

AREA OF REFUGE 1 AND 2 SHALL HAVE COMMUNICATIONS (INTERCOM) BETWEEN THE AREA OF REFUGE AND THE MAIN COMMUNICATION PANEL ADJACENT TO THE FIRE ALARM CONTROL PANEL IN THE VESTIBULE ON THE FIRST FLOOR.

1/4"=1'-0"

NO.	DATE	ISSUED FOR	BY
1	4-1-14	100% QA COMMENTS	H.J.V.

DESIGNED J.M.B.
DRAWN J.M.B.
CHECKED J.C.B.
PROJ. ENGR. J.C.B.

JOHN C. BURKE P.E.
No. 17301

HAZEN AND SAWYER
Environmental Engineers & Scientists
4000 Hollywood Boulevard, Suite 750N
Hollywood, Florida 33021
Certificate of Authorization Number: 2771

SCALE 1/4"=1'0"

CLIENTS PROJECT: –
ENGINEERS PROJECT: 44238-004
CAD REFERENCE: 44238-004BP3-E17

NORTH MIAMI FLORIDA
CITY OF NORTH MIAMI
PUBLIC WORKS UTILITIES

WINSON WATER TREATMENT PLANT
BID PACKAGE 3: WTP REHABILITATION
NEW ADMINISTRATION BUILDING
SECOND FLOOR FIRE ALARM PLAN

DATE: JUNE 2014
SHEET: 256 OF 335
DRAWING: E-17

PERMITTING

File = H:\44238-004\Drawings\Bid Package 3 - WTP Rehab\Electrical\44238-004BP3-E17 Saved by jbroad Save date = 6/9/2014 7:56 PM

PLOT DATE: 6/10/2014 12:08 PM BY: HIS

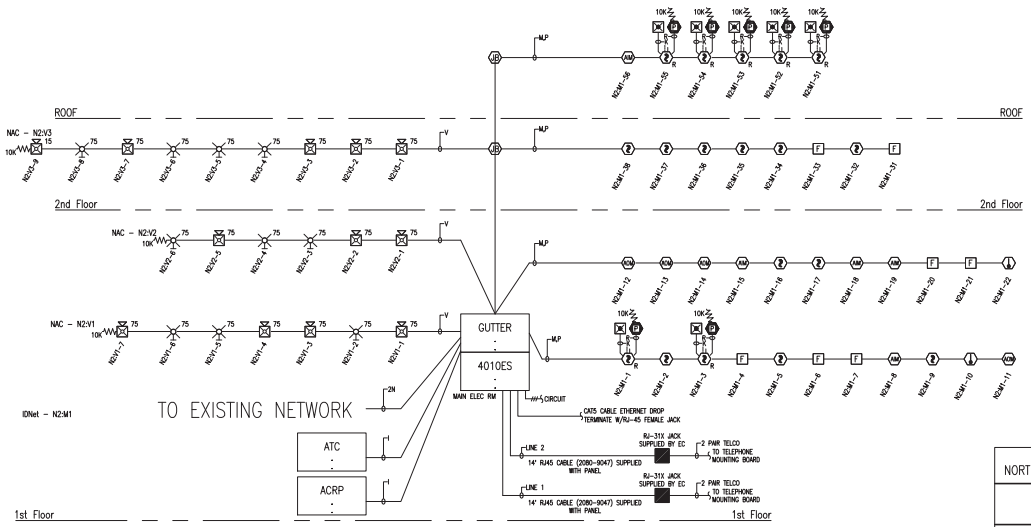

Battery Set #1 (Cabinet/Charger #1)			Standby Current	Standby Total	Alarm Current	Alarm Total
Select ALL Power Supplies on this battery set:						
			Sub Total	0.3370		2.3390
Additional Current Draws:						
RUI Connected Peripheral Devices	0		x 0.0035	= 0.0000	x 0.0035	= 0.0000
MAPNET/IDNet Device Addresses ordered / used	0		x 0.000800	= 0.0000	x 0.001000	= 0.0000
			Sub Total	0.3370		2.3390
Spare addressable point capacity	0%	0	x 0.0008	= 0.0000	x 0.001	= 0.0000
			Total	0.3370		2.3390
Standby Time =	24	Hrs	x 0.3370	= 8.0880	Standby Ah	
Alarm Time =	5	Min	0.08333 x 2.339	= 0.1949	Alarm Ah	
				8.2829		
Additional Spare Capacity =	20%		+	1.6566		
				9.9395		
Battery Discharge Factor =	20%		+	1.9879		
Minimum Battery Required	2081-9288 12AH (2x)			11.9274		
Battery Supplied	2081-9288 12AH (2x)					

NORTH MIAMI WATER TREATMENT PLANT 4010es FACP

Module	Qty	Description	Standby Current	Total Standby	Alarm Current	Total Alarm
Panel Equipment						
4010-9401	1	FACP, 248PT IDNET, 1 BAY, 120V, RED *	0.3160	0.3160	0.4300	0.4300
		Panel Totals		0.3160		0.4300
IDNet Addressable Devices (SLC)						
4099-9001	7	IDNET SINGLE ACTION PULL STATION **	0.0000	0.0000	0.0000	0.0000
4090-9001	5	IDNET SUPERVISED IAM **	0.0000	0.0000	0.0000	0.0000
4090-9002	4	IDNET RELAY IAM **	0.0000	0.0000	0.0000	0.0000
4098-9714	11	TRUEALARM PHOTO SMOKE SENSOR	0.0000	0.0000	0.0000	0.0000
4098-9733	2	TRUEALARM HEAT SENSOR	0.0000	0.0000	0.0000	0.0000
4098-9756	7	TRUEALARM DUCT SMOKE SENSOR W/ RELAY OUTPUT **	0.0000	0.0000	0.0000	0.0000
4098-9792	13	TRUEALARM SENSOR BASE **	0.0000	0.0000	0.0000	0.0000
Miscellaneous Peripheral Devices That May Require System Power						
4098-9843	7	ENCAPSULATED RELAY PAM-SD	0.0000	0.0000	0.0150	0.1050
4098-9756	7	TRUEALARM DUCT SMOKE SENSOR W/ RELAY OUTPUT	0.0030	0.0210	0.0150	0.1050
Notification Appliances						
4906-9101	5	V/O MC NON-ADDRESS, RED, WALL 15	0.0000	0.0000	0.0600	0.3000
4906-9101	4	V/O MC NON-ADDRESS, RED, WALL 30	0.0000	0.0000	0.0940	0.3760
4906-9127	9	A/V MC NON-ADDRESS, RED, WALL 15	0.0000	0.0000	0.0750	0.6750
4906-9127	3	A/V MC NON-ADDRESS, RED, WALL 30	0.0000	0.0000	0.1160	0.3480
		Peripheral Totals		0.0210		1.9090
		RUI Totals 0		0.0000		0.0000
		Address Totals 36 Addresses		0.0288		0.0360
		Total Standby		0.3658	Total Alarm	2.3750

* Current draw included under "Device Addresses Used" (See "Additional Current Draws:")
1. 2-wire detector alarm current is included in the alarm current of the Initiating Device Circuit.
2. Backup Amplifier assumes Main Amplifier alarm current on failure.

NOTES:

1. THE ABOVE FIRE ALARM SYSTEM SINGLE LINE DIAGRAM SHOWN IS FOR CONCEPTUAL PURPOSES ONLY. THE ACTUAL FIRE ALARM SYSTEM SINGLE LINE DIAGRAM SHALL BE DESIGNED BY THE VENDOR AS DESCRIBED IN THE SPECIFICATIONS.
2. SEE PROPOSED FIRE ALARM DRAWINGS BY THE VENDOR IN APPENDIX FOR DETAILS, CONDUIT ROUTING AND WIRING REQUIREMENTS.
3. THERE WILL BE TWO "AREAS OF REFUGE" REQUIRED ON THE SECOND FLOOR; EACH WITH AN AUDIO COMMUNICATION DEVICE (INTERCOM) CONNECTED TO A MAIN INTERCOM STATION LOCATED ADJACENT TO THE FACP OR AS AN INTEGRAL PART OF THE FACP.
4. FACP SHALL SIGNAL THE AC NETWORK MANAGER PANEL (ATC) TO DEACTIVATE THE THE HVAC EQUIPMENT AND POSITION ALL CONTROLLABLE DAMPERS IN PROPER POSITION.
5. FACP SHALL SIGNAL THE SECURITY ACCESS CONTROL PANELS VIA AN ACCESS SECURITY RELAY PANEL (ACRP) WHICH SHALL RELEASE LOCKED DOORS AND OPEN SITE GATES IF SECURITY ALLOWS.

1/4"=1'-0"

NO.	DATE	ISSUED FOR	BY
1	4-1-14	100% QA COMMENTS	H.J.V.

PLOT DATE: 6/10/2014 12:09 PM BY: HS

DESIGNED J.M.B.
DRAWN J.M.B.
CHECKED J.C.B.
PROJ. ENGR. J.C.B.

JOHN C. BURKE P.E.
No. 17301

HAZEN AND SAWYER
Environmental Engineers & Scientists
4000 Hollywood Boulevard, Suite 750N
Hollywood, Florida 33021
Certificate of Authorization Number: 2771

SCALE 1/4"=1'0"

CLIENTS PROJECT: –
ENGINEERS PROJECT: 44238-004
CAD REFERENCE: 44238-004BP3-E18

NORTH MIAMI FLORIDA
CITY OF NORTH MIAMI
PUBLIC WORKS UTILITIES

WINSON WATER TREATMENT PLANT
BID PACKAGE 3: WTP REHABILITATION
NEW ADMINISTRATION BUILDING FIRE ALARM RISER AND CALCULATIONS

DATE: JUNE 2014
SHEET: 257 OF 335
DRAWING: E-18

PERMITTING

File = H:\44238-004\Drawings\Bid Package 3 - WTP Rehab\Electrical\44238-004BP3-E18 Saved by jbroad Save date = 6/9/2014 4:27 PM

WIRE SCHEDULE

FIRE ALARM WIRE LIST

B	RUI/N2 COMMUNICATION – 1 PAIR 18 AWG TWISTED OVERALL SHIELD NON-PLENUM RATED: FPL PAIGE 740215 AREA=0.0196 SQ. INCH	NON-PLENUM RATED: FPLR PAIGE 740215 AREA=0.0196 SQ. INCH	PLENUM RATED: FPLP PAIGE 740214L AREA=0.0196 SQ. INCH
K	REMOTE TEST SWITCH/LED CIRCUIT – (2) 2 CONDUCTOR 18 AWG SOLID NON-PLENUM RATED: FPLR PAIGE 454703ARE AREA=0.0204 SQ. INCH	CONDUIT ONLY: TFFN (2) #18 AWG (PINK/BROWN) (2) #18 AWG (WHITE/ORANGE) AREA=0.0055 SQ. INCH (EACH)	PLENUM RATED: FPLP PAIGE 740132 AREA=0.0141 SQ. INCH
M	MAPNET/IDNET CIRCUIT – 1 PAIR 18 AWG TWISTED OVERALL SHIELD NON-PLENUM RATED: FPL PAIGE 740215 AREA=0.0196 SQ. INCH	NON-PLENUM RATED: FPLR PAIGE 740215 AREA=0.0196 SQ. INCH	PLENUM RATED: FPLP PAIGE 740214L AREA=0.0196 SQ. INCH
N	RS-485 COMMUNICATION TRUNK – 1 PAIR 18 AWG TWISTED OVERALL SHIELD NON-PLENUM RATED: FPL PAIGE 740215 AREA=0.0196 SQ. INCH	NON-PLENUM RATED: FPLR PAIGE 740215 AREA=0.0196 SQ. INCH	PLENUM RATED: FPLP PAIGE 740214L AREA=0.0196 SQ. INCH
P	MAPNET/IDNET POWER CIRCUIT – 2 CONDUCTOR 14 AWG SOLID NON-PLENUM RATED: FPLR PAIGE 454718ARE AREA=0.0380 SQ. INCH	CONDUIT ONLY: THHN PAIGE 454314BR #14 AWG TP (BLACK/RED) AREA=0.0394 SQ. INCH	PLENUM RATED: FPLP PAIGE 454719ARE AREA=0.0333 SQ. INCH
R	RELAY CIRCUIT – 2 CONDUCTOR 14 AWG SOLID NON-PLENUM RATED: FPLR PAIGE 454718ARE AREA=0.0380 SQ. INCH	CONDUIT ONLY: THHN PAIGE 454314BR #14 AWG TP (BLACK/RED) AREA=0.0394 SQ. INCH	PLENUM RATED: FPLP PAIGE 454719ARE AREA=0.0333 SQ. INCH
V	VISUAL/SIGNAL CIRCUIT – 2 CONDUCTOR 12 AWG STRANDED NON-PLENUM RATED: FPLR PAIGE 454676ARE AREA=0.0661 SQ. INCH	CONDUIT ONLY: THHN (2) #12 AWG (RED/BLACK) AREA=0.0133 SQ. INCH (EACH)	PLENUM RATED: FPLP PAIGE 454698ARE AREA=0.0483 SQ. INCH

********** REFER TO SIGNAL CIRCUIT DISTANCE CHART **********

CONDUIT SIZE	CONDUCTOR AREA	CONDUIT SIZE	CONDUCTOR AREA
3/4"	0.21 SQ INCH *	1-1/4"	0.60 SQ INCH *
1"	0.34 SQ INCH *	1-1/2"	0.82 SQ INCH *
		2"	1.34 SQ INCH *

* 40% FILL PER N.E.C.

THE CABLES SPECIFIED HERE ARE FOR REFERENCE OF REQUIRED ELECTRICAL CHARACTERISTICS AS WELL AS CODE REQUIREMENTS. ALTERNATE SUPPLIERS MAY BE SUBSTITUTED PROVIDING EQUIVALENT CHARACTERISTICS ARE MAINTAINED. ITEMS SUCH AS CAPACITANCE BETWEEN CONDUCTORS AND WIRE GAUGE CAN BE CRUCIAL TO THE CIRCUIT DESIGN OF THIS SYSTEM INSTALLATION.

SYSTEM DESCRIPTION / SCOPE OF WORK

OCCUPANCY TYPE: B BUSINESS GROUP

SPRINKLER PROTECTION: BUILDING IS NOT SPRINKLED

MODIFY EXISTING FIRE ALARM SYSTEM: PROVIDE NEW DEVICES, RELOCATE AND DEMO EXISTING DEVICES AS SHOWN ON DRAWINGS.

ALL NEW WIRING TO BE CLASS B.

THE EXISTING FIRE ALARM SYSTEM SHALL NOT BE DISCONNECTED OR TAKEN OUT OF SERVICE WITHOUT WRITTEN PERMISSION FROM THE OWNER. IT IS THE CONTRACTOR'S RESPONSIBILITY TO COORDINATE WITH THE OWNER THE TIMING OF ANY EXISTING FIRE ALARM SYSTEM DEMOLITION WORK.

FIRE ALARM APPLICABLE CODES & STANDARDS

2010 FLORIDA FIRE PREVENTION CODE (NFPA 101, 2009 EDITION)

NATIONAL FIRE ALARM CODE (NFPA 72), 2007 EDITION

FLORIDA BUILDING CODE, 2010 EDITION (INTERNATIONAL BUILDING CODE (IBC) 2009 EDITION)

NATIONAL ELECTRICAL CODE (NEC, NFPA 70), 2008 EDITION

JURISDICTIONS WITHIN THE STATE MAY HAVE AMENDMENTS TO THE STATE ADOPTED CODE. CHECK WITH THE LOCAL JURISDICTION AUTHORITY FOR MORE DETAILS.

SYMBOL KEY

FIRE ALARM SYMBOLS LEGEND

SYMBOL	DESCRIPTION	MODEL#	BACKBOX
F	MANUAL PULL STATION	SIMPLEX 4099-9003	SINGLE GANG BOX 2 1/2" DEEP
AM	INDIVIDUAL ADDRESSABLE MODULE	SIMPLEX 4090-9001	SINGLE GANG BOX 2 1/2" DEEP WITH COVER
AM	RELAY IAM	SIMPLEX 4090-9002	4" SQUARE BOX 2 1/8" DEEP W/TWO GANG COVER
	SMOKE SENSOR / BASE	SIMPLEX 4098-9714 SIMPLEX 4098-9792 BASE	4" OCTAGONAL BOX 1 1/2" DEEP
10K	HEAT SENSOR / BASE	SIMPLEX 4098-9733 SIMPLEX 4098-9792 BASE	4" OCTAGONAL BOX 1 1/2" DEEP
R	DUCT SMOKE SENSOR	SIMPLEX 4098-9756	MOUNT TO DUCTWORK W/4905-9937 ADAPTER SKIRT WHEN SURFACE MOUNTED
	REMOTE TEST STATION W/ LED AND KEY SWITCH	SIMPLEX 2098-9806	SINGLE GANG BOX 2 1/2" DEEP W/4905-9937 ADAPTER SKIRT WHEN SURFACE MOUNTED
	WALL MOUNT MULTI-CANDELA A/V RED # =CANDELA RATING	SIMPLEX 4906-9127	4" SQUARE BOX 1 1/2" DEEP W/4905-9937 ADAPTER SKIRT WHEN SURFACE MOUNTED
	WALL MOUNT MULTI-CANDELA V/O RED # =CANDELA RATING	SIMPLEX 4906-9101	4" SQUARE BOX 1 1/2" DEEP W/4905-9937 ADAPTER SKIRT WHEN SURFACE MOUNTED
xxx	END-OF-LINE RESISTOR 3.3K (EOL) END-OF-LINE RESISTOR 4.7K (EOL) END-OF-LINE RESISTOR 6.8K (EOL) END-OF-LINE RESISTOR 10K (EOL)	SIMPLEX 4081-9002 SIMPLEX 4081-9003 SIMPLEX 4081-9004 SIMPLEX 4081-9008	SUPPLIED BY OTHERS
FATC	FIRE ALARM TERMINAL CABINET	SUPPLIED BY OTHERS	SUPPLIED BY OTHERS
JB	JUNCTION/PULL BOX	SUPPLIED BY OTHERS	SUPPLIED BY OTHERS
VS	TAMPER SWITCH	SUPPLIED BY OTHERS	INSTALLED BY MECHANICAL CONTRACTOR
WF	WATERFLOW SWITCH	SUPPLIED BY OTHERS	INSTALLED BY MECHANICAL CONTRACTOR
FAA	FIRE ALARM ANNUNCIATOR PANEL	SIMPLEX 4606-9102	6 GANG BOX 3 1/2" DEEP
FACP	FIRE ALARM CONTROL PANEL W / 12AH BATTERY SET	SIMPLEX 4010-9401 SIMPLEX 2081-9288	SUPPLIED BY SIMPLEXGRINNELL

ABBREVIATIONS LEGEND

AC = ABOVE CEILING
C = CEILING MOUNTED
E = EXISTING TO REMAIN
RC = EXISTING TO REMOVE AND COVER
RD = EXISTING DEVICE TO BE RELOCATED
RL = RELOCATED DEVICE
RR = REMOVE EXISTING AND REPLACE W/NEW
WP = WEATHERPROOF
XP = EXPLOSION PROOF

AFF = ABOVE FINISHED FLOOR
AHJ = AUTHORITY HAVING JURISDICTION
ALM = ALARM
ANN = ANNUNCIATOR
BMS = BUILDING MANAGEMENT SYSTEM
CBC = CALIFORNIA BUILDING CODE
CD = (eg. 15CD) CANDELA
CSFM = CALIFORNIA STATE FIRE MARSHALL
DET = DETECTOR
DGP = DATA GATHERING PANEL
EOL = END OF LINE
EPO = EMERGENCY POWER OFF
FACP = FIRE ALARM CONTROL PANEL
FATC = FIRE ALARM TERMINAL CABINET
FBO = FURNISHED BY OTHERS
FCC = FIRE COMMAND CENTER
FAA = FIRE ALARM ANNUNCIATOR
FTR = FIRE ALARM TRANSPONDER
FSD = FIRE SMOKE DAMPER

HT = HEIGHT
HVAC = HEATING, VENTILATION, & AIR CONDITIONING
IMS = INFORMATION MANAGEMENT SYSTEM
MAX = MAXIMUM
MIN = MINIMUM
N/A = NOT APPLICABLE
NAC = NOTIFICATION APPLIANCE CIRCUIT EXTENDER
NDU = NETWORK DISPLAY UNIT
NEC = NATIONAL ELECTRICAL CODE
NFPA = NATIONAL FIRE PROTECTION ASSOCIATION
NIC = NOT IN CONTRACT
NPU = NETWORK PROCESSING UNIT
NTS = NOT TO SCALE
PAP = PRE-ACTION PANEL
SCC = STATUS COMMAND CENTER
SLC = SIGNALING LINE CIRCUIT
SMK = SMOKE
SUPV = SUPERVISORY
TAC = TRUEALERT ADDRESSABLE CONTROLLER
TRBL = TROUBLE
TS = TAMPER SWITCH
TYP = TYPICAL
UON = UNLESS OTHERWISE NOTED
VCC = VOICE COMMAND CENTER
VT = VALVE TAMPER
WF = WATER FLOW
W = (eg. 1/2W) WATT
W/ = WITH
W/O = WITH OUT

DEVICE ADDRESSING LEGEND

ADDRESSABLE CARD (IDNET OR MAPNET)
NODE DESIGNATOR
DEVICE ADDRESS
N1:M2-1

ADDRESSABLE DEVICES NUMBERING

CIRCUIT DESIGNATOR
V=VISUAL OR A/V, H=AUDIBLE ONLY)
DEVICE DESIGNATOR
V2-1

VISUAL, AUDIBLE OR A/V DEVICE

GENERAL FIRE ALARM SYSTEM NOTES

1. THESE DRAWINGS DEPICT GENERAL LOCATIONS OF LIFE SAFETY EQUIPMENT & FIELD DEVICES. EXACT ROUTING OF CONDUITS TO BE DETERMINED IN THE FIELD BY THE INSTALLING CONTRACTOR TO SUIT CONDITIONS. ALL CHANGES SHALL BE CLEARLY INDICATED ON THE RECORD DRAWINGS.
2. SHOULD ANY CONDITIONS EXIST THAT DIFFER FROM WHAT IS INDICATED ON THESE DRAWINGS WHICH CAUSE MAJOR DEVIATIONS IN THE WORK SHOWN, THE CONTRACTOR SHALL CONTACT SIMPLEXGRINNELL IN A TIMELY MANNER SO AS NOT TO IMPAIR THE CONSTRUCTION SCHEDULE.
3. CONTRACTOR IS RESPONSIBLE FOR MAKING AND OBTAINING APPROVAL FOR ALL NECESSARY ADJUSTMENTS IN CIRCUITING AS REQUIRED TO ACCOMMODATE THE RELOCATION OF EQUIPMENT AND/OR DEVICES WHICH ARE AFFECTED BY ANY AUTHORIZED CHANGE. ALL CHANGES SHALL BE CLEARLY INDICATED ON THE RECORD DRAWINGS.
4. A STAMPED SET OF APPROVED FIRE ALARM DRAWINGS SHALL BE AT THE JOB SITE AND SHALL BE USED FOR INSTALLATION.
5. THE POWER CIRCUIT TO THE FACP AND TO THE FIRE ALARM POWER SUPPLIES SHALL BE ON A DEDICATED 120V, 20A BRANCH CIRCUIT BREAKER, AND SHALL HAVE A RED MARKING, LOCK-ON PROVISION AND SHALL BE IDENTIFIED AS "FIRE ALARM CIRCUIT CONTROL." THE LOCATION OF THE CIRCUIT DISCONNECT MEANS (CIRCUIT BREAKER) SHALL BE PERMANENTLY IDENTIFIED AT THE FIRE ALARM CONTROL UNIT.
6. UPDATE THE AS-BUILT DRAWING SET DAILY WITH JOB PROGRESS. RETURN THE AS-BUILT DRAWING SET TO SIMPLEXGRINNELL NO LATER THAN 7 DAYS AFTER FINAL TEST.
7. THE CONTRACTOR WILL MAINTAIN ALL AREAS OF THE BUILDING IN A NEAT AND WORKMAN LIKE MANNER.
8. DO NOT APPLY POWER EXCEPT IN THE PRESENCE OF A FACTORY TRAINED SIMPLEXGRINNELL TECHNICAL REPRESENTATIVE.
9. ANY SMOKE DETECTOR HEAD INSTALLED BEFORE THE BUILDING IS CLEANED AND ACCEPTED SHALL BE COVERED TO PROTECT FROM DUST. ANY FALSE ALARMS DUE TO DIRT CONTAMINATED HEADS SHALL BE THE RESPONSIBILITY OF THE FIRE ALARM INSTALLER.
10. THE FIRE ALARM INSTALLER WILL MAINTAIN THE FIRE RESISTANCE INTEGRITY OF ALL WALL, CEILING, AND ROOF ASSEMBLIES ANY TIME THAT WORK IS NOT ACTIVELY BEING PERFORMED.
11. INSTALLATION OF DEVICES SHALL BE IN ACCORDANCE WITH MANUFACTURER'S INSTRUCTIONS. POWER LIMITED AND NON-POWER LIMITED FIELD WIRING MUST BE INSTALLED WITHIN THE FACP ENCLOSURE IN ACCORDANCE WITH MANUFACTURER'S INSTRUCTIONS AND NEC.
12. ALL WIRING SHALL BE INSTALLED ACCORDING TO NFPA 70 (NEC).
13. FIRE ALARM CIRCUITS SHALL BE IDENTIFIED IN ACCORDANCE WITH APPROPRIATE SECTION OF NEC 760. MARK ALL FIRE ALARM WIRES IN ACCORDANCE WITH NEC 760 SECTIONS FOR POWER LIMITED AND NON-POWER LIMITED WIRE.
14. FIRE ALARM CABLE INSTALLED IN DUCTS, PLENUM, AND OTHER SPACES USED FOR ENVIRONMENTAL AIR SHALL BE TYPE FPLP.
15. FIRE ALARM CABLE INSTALLED IN THE VERTICAL RUNS AND PENETRATE MORE THAN ONE FLOOR OR CABLES INSTALLED IN VERTICAL RUNS IN SHAFTS SHALL BE TYPE FPLR.
16. FIRE ALARM CABLE INSTALLED IN UNDERGROUND CONDUIT OR OTHER WET LOCATIONS SHALL BE UL LISTED FOR WET LOCATIONS.
17. FIRE ALARM CIRCUITS EXTENDING BEYOND ONE BUILDING AND RUN OUTDOOR SHALL BE INSTALLED IN ACCORDANCE WITH NFPA 70 ARTICLES 760, 770, 725 AND 800 WHERE APPLICABLE.
18. ALL WIRING, INCLUDING SHIELDS MUST BE DRY AND FREE OF SHORTS AND GROUNDS.
19. ALL SHIELDED WIRE MUST HAVE SHIELD CONTINUITY AT FULL LENGTH OF THE WIRE.
20. ONLY SYSTEM WIRING CAN BE RUN IN THE SAME CONDUIT.
21. 120VAC IS NOT PERMITTED IN THE SAME CONDUIT WITH LOW VOLTAGE WIRING.
22. MAINTAIN 40 PERCENT CONDUIT FILL RATIO AS PER NEC REQUIREMENTS.
23. EXISTING CONDUITS MAY BE USED BY THE INSTALLATION CONTRACTOR AS DEEMED NECESSARY, HOWEVER, ANY EXISTING CONDUIT WILL BE USED ONLY IF CONDUITS MEET CURRENT STANDARDS AND CODES. SIMPLEXGRINNELL MAKES NO STATEMENTS WRITTEN OR VERBAL AS TO THE CONDITION OF EXISTING CONDUITS.

NO.	DATE	ISSUED FOR	BY
1	4-1-14	100% QA COMMENTS	H.J.V.

DESIGNED J.C.B.
DRAWN J.M.B.
CHECKED J.C.B.
PROJ. ENGR. J.C.B.

JOHN C. BURKE P.E.
No. 17301

HAZEN AND SAWYER
Environmental Engineers & Scientists
4000 Hollywood Boulevard, Suite 750N
Hollywood, Florida 33021
Certificate of Authorization Number: 2771

SCALE –

CLIENTS PROJECT: –
ENGINEERS PROJECT: 44238-004
CAD REFERENCE: 44238-004BP3-E19

NORTH MIAMI FLORIDA
CITY OF NORTH MIAMI
PUBLIC WORKS UTILITIES

WINSON WATER TREATMENT PLANT
BID PACKAGE 3: WTP REHABILITATION
NEW ADMINISTRATION BUILDING FIRE ALARM NOTES AND LEGENDS

DATE: JUNE 2014
SHEET: 258 OF 335
DRAWING: E-19

PERMITTING

PLOT DATE: 6/10/2014 12:10 PM BY: MS
XREFs= ..\Tblock\44238-004-BP3-TB
File = H:\44238-004\Drawings\Bid Package 3 - WTP Rehab\Electrical\44238-004BP3-E19 Saved by jbrood Save date = 6/9/2014 7:56 PM

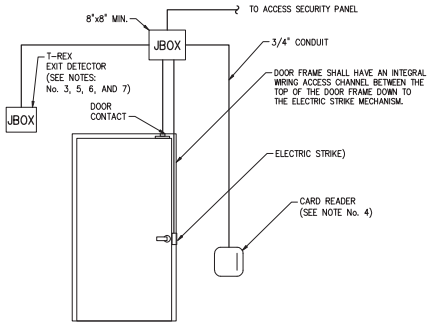

TYPICAL SINGLE DOOR STRIKE CONDUIT DETAIL

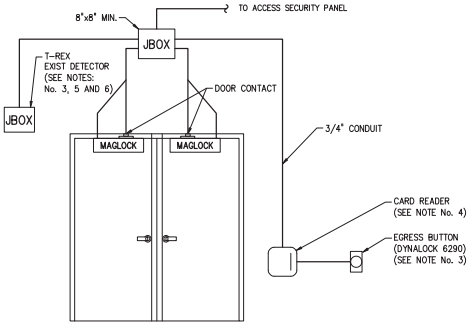

TYPICAL DOUBLE DOOR MAGLOCK CONDUIT DETAIL

NOTES:

1. ALL BOXES 2"x4" UNLESS OTHERWISE NOTED.
2. ALL CONDUIT 3/4" MINIMUM UNLESS OTHERWISE NOTED OR REQUIRED BY SEC SYSTEM PROVIDER.
3. MOUNTS ON SECURED SIDE OF DOOR. REQUIRED WITH MAGLOCK EQUIPMENT.
4. MOUNTS ON UNSECURED SIDE OF DOOR.
5. MOUNTS TO SIDE OF DOORWAY.
6. MOUNT HORIZONTALLY.
7. OPTIONAL FOR DOORS SECURED WITH A STRIKE MECHANISM.

SCOPE OF WORK

1. INSTALL KEYSCAN ACCESS CONTROL SYSTEM PER NFPA 101 AS AMENDED BY THE FLORIDA FIRE PREVENTION CODE (LATEST EDITION) AND NATIONAL ELECTRICAL CODE ON INTERIOR AND EXTERIOR DOORS AS DEPICTED ON THE DRAWINGS.
2. FURNISH AND INSTALL NEW VIDEO SURVEILLANCE SYSTEM AS DEPICTED ON THE DRAWINGS. MODIFY EXISTING VIDEO SURVEILLANCE SYSTEM AS DEPICTED ON THE DRAWINGS. ALL CABLE FROM VIDEO CAMERAS SHALL BE SUPPLIED BY THE SECURITY SYSTEM SUPPLIER.
3. FURNISH AND INSTALL PERIMETER GATE ACCESS CONTROL SYSTEM AS DEPICTED ON THE DRAWINGS.
4. ALL OTHER WORK REQUIRED FOR A COMPLETE AND OPERABLE SYSTEM.

ACCESS CONTROL NOTES:

1. CONTRACTOR TO FURNISH AND INSTALL ALL CABLE, CONDUIT AND AC POWER WHERE REQUIRED.
2. ALL CABLES SHALL BE ROUTED FROM EACH DEVICE TO THE ACCESS CONTROL SYSTEM CONTROLLER AS PROPOSED ON DRAWING E-21
3. ALL ELECTRIFIED DOOR HARDWARE TO BE SUPPLIED BY DIVISION 8 OF THE SPECIFICATIONS.
4. ALL ELECTRIFIED DOOR HARDWARE TO BE 24VDC.
5. DOUBLE MAG LOCK SHOULD COME EQUIPPED WITH DOOR STATUS MODULE AND MAGNETIC BOND SENSOR (MBS) OPTIONS.
6. DOORS WITH ELECTRIC STRIKES WILL REQUIRE A STOREROOM FUNCTION LOCKSET-TO BE SUPPLIED BY DIVISION 8 OF THE SPECIFICATIONS.

COMPLIANCE WITH FLORIDA FIRE PREVENTION CODE (NFPA 101)

ARTICLE 7.2.1.6.2: ACCESS CONTROLLED EGRESS DOOR ASSEMBLIES:

WHERE PERMITTED IN CHAPTERS 11 THROUGH 43, DOOR ASSEMBLIES IN THE MEANS OF EGRESS SHALL BE PERMITTED TO BE EQUIPPED WITH AN APPROVED ENTRANCE AND EGRESS ACCESS CONTROL SYSTEM, PROVIDED THAT ALL THE FOLLOWING CRITERIA ARE MET:

(1) A SENSOR SHALL BE PROVIDED ON THE EGRESS SIDE, ARRANGED TO DETECT AN OCCUPANT APPROACHING DOOR LEAVES THAT ARE ARRANGED TO UNLOCK IN THE DIRECTION OF EGRESS UPON DETECTION OF AN APPROACHING OCCUPANT OR LOSS OF POWER TO THE SENSOR.

(2) LOSS OF POWER TO THE PART OF THE ACCESS CONTROL SYSTEM THAT LOCKS THE DOOR LEAVES SHALL AUTOMATICALLY UNLOCK THE DOOR LEAVES IN THE DIRECTION OF EGRESS.

(3) DOOR LEAVES SHALL BE ARRANGED TO UNLOCK IN THE DIRECTION OF EGRESS FROM A MANUAL RELEASE DEVICE LOCATED 40 TO 48 INCHES VERTICALLY ABOVE THE FLOOR AND WITHIN 60 INCHES OF THE SECURED DOOR OPENINGS.

(4) THE MANUAL RELEASE DEVICE SPECIFIED IN 7.2.1.6.2(3) SHALL BE READILY ACCESSIBLE AND CLEARLY IDENTIFIED BY A SIGN THAT READS AS FOLLOWS: PUSH TO EXIT.

(5) WHEN OPERATED, THE MANUAL RELEASE DEVICE SHALL RESULT IN DIRECT INTERRUPTION OF POWER TO THE LOCK – INDEPENDENT OF THE ACCESS CONTROL SYSTEM ELECTRONICS – AND THE DOOR LEAVES SHALL REMAIN UNLOCKED FOR NOT LESS THAN 30 SECONDS.

(6) ACTIVATION OF THE BUILDING FIRE-PROTECTIVE SIGNALING SYSTEM, IF PROVIDED, SHALL AUTOMATICALLY UNLOCK THE DOOR LEAVES IN THE DIRECTION OF EGRESS, AND THEY SHALL REMAIN UNLOCKED UNTIL THE FIRE-PROTECTIVE SIGNALING SYSTEM HAS BEEN MANUALLY RESET.

(7) THE ACTIVATION OF MANUAL FIRE ALARM BOXES THAT ACTIVATE THE BUILDING FIRE-PROTECTIVE SIGNALING SYSTEM SPECIFIED IN 7.2.1.6.2(6) SHALL NOT BE REQUIRED TO UNLOCK THE DOOR LEAVES.

(8) ACTIVATION OF THE BUILDING AUTOMATIC SPRINKLER OR FIRE DETECTION SYSTEM, IF PROVIDED, SHALL AUTOMATICALLY UNLOCK THE DOOR LEAVES IN THE DIRECTION OF EGRESS, AND THEY SHALL REMAIN UNLOCKED UNTIL THE FIRE-PROTECTIVE SIGNALING SYSTEM HAS BEEN MANUALLY RESET.

NO.	DATE	ISSUED FOR	BY

DESIGNED G.A.B.
DRAWN G.P.B.
CHECKED J.N.M.
PROJ. ENGR. G.A.B.

JOHN C. BURKE P.E.
No. 17301

HAZEN AND SAWYER
Environmental Engineers & Scientists
4000 Hollywood Boulevard, Suite 750N
Hollywood, Florida 33021
Certificate of Authorization Number: 2771

SCALE 3/4"=1'-0"

CLIENTS PROJECT: –
ENGINEERS PROJECT: 44238-004
CAD REFERENCE: 44238-004BP3-E20

CITY OF NORTH MIAMI
PUBLIC WORKS UTILITIES

WINSON WATER TREATMENT PLANT
BID PACKAGE 3: WTP REHABILITATION
SECURITY ACCESS
ELECTRICAL DETAILS
SHEET 1

DATE: JUNE 2014
SHEET: 259 OF 335
DRAWING: E-20

PERMITTING

PLOT DATE: 6/10/2014 12:11 PM BY: HS

XREFs= ..\Block\44238-004-BP3-TB,..\Base-BP3\S-BP3-FlowMeter-IntermediatePlan,..\Base-BP3\M-BP3-FlowMeter-IntermediatePlan

File = H:\44238-004\Drawings\Bid Package 3 - WTP Rehab\Electrical\44238-004BP3-E20 Saved by HScalf Save date = 6/9/2014 8:32 PM

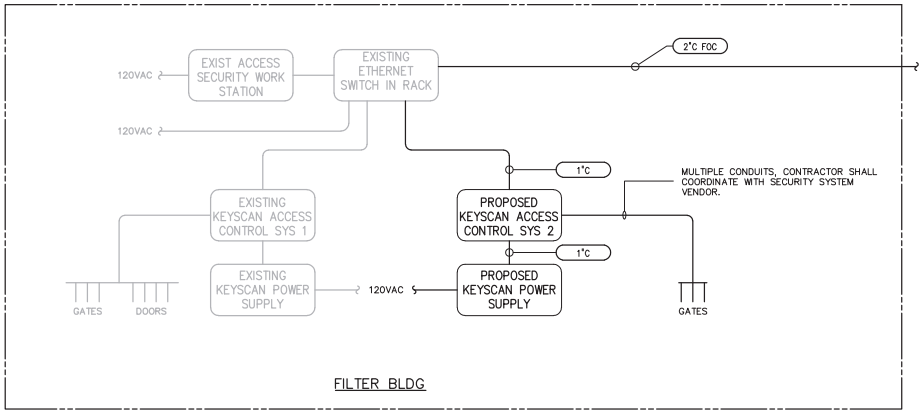

SEE DRAWING E-40 FOR SCHEDULE OF GATES TO BE TERMINATED AT THESE KEYSCAN ACCESS CONTROL PANELS

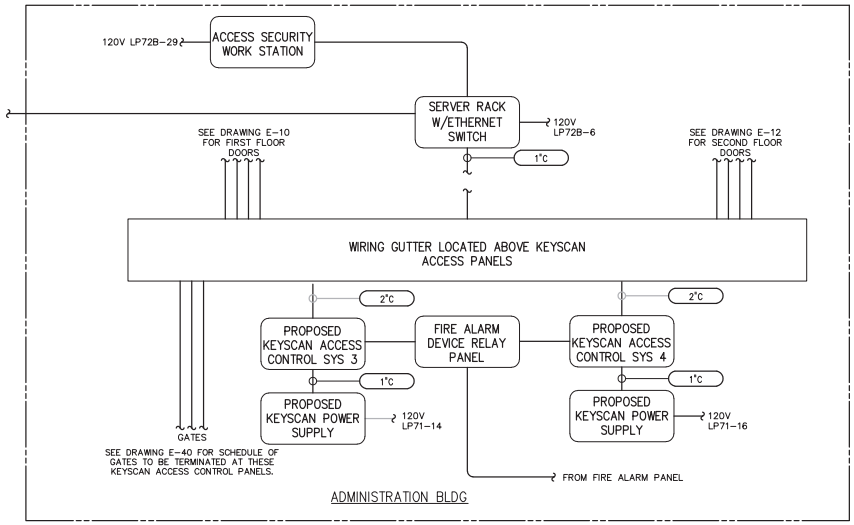

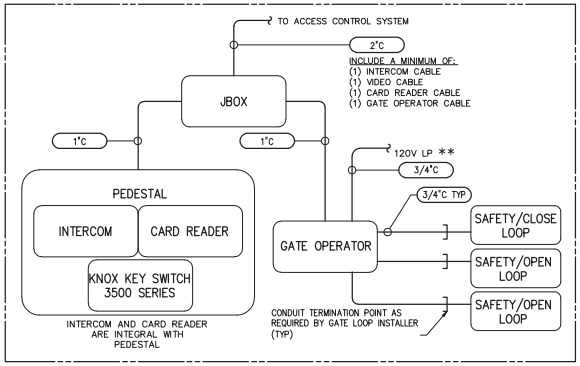

PROPOSED GATE ACCESS
CONTROL RISER (TYPICAL FOR EACH OF 5 GATES)

** SEE DRAWING E-40 FOR GATE EQUIPMENT POWER SOURCE

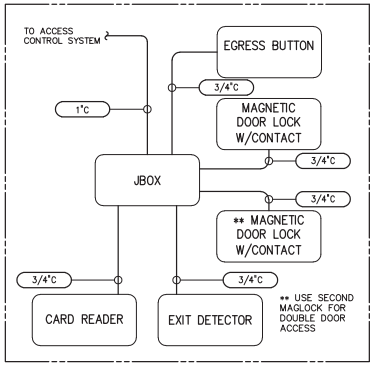

SINGLE AND DOUBLE DOOR
MAGNETIC ACCESS CONTROL RISER

SEE DRAWING E-10 FOR FIRST FLOOR DOORS
SEE DRAWING E-12 FOR SECOND FLOOR DOORS

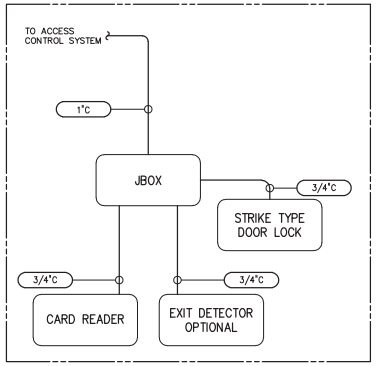

SINGLE DOOR
STRIKE ACCESS CONTROL RISER

NO.	DATE	ISSUED FOR	BY

DESIGNED G.A.B.
DRAWN G.P.B.
CHECKED J.N.M.
PROJ. ENGR. G.A.B.

JOHN C. BURKE P.E.
No. 17301

HAZEN AND SAWYER
Environmental Engineers & Scientists
4000 Hollywood Boulevard, Suite 750N
Hollywood, Florida 33021
Certificate of Authorization Number: 2771

SCALE NTS

CLIENTS PROJECT: –
ENGINEERS PROJECT: 44238-004
CAD REFERENCE: 44238-004BP3-E21

NORTH MIAMI FLORIDA
CITY OF NORTH MIAMI
PUBLIC WORKS UTILITIES

WINSON WATER TREATMENT PLANT
BID PACKAGE 3: WTP REHABILITATION
SECURITY ACCESS
ELECTRICAL DETAILS
SHEET 2

DATE: JUNE 2014
SHEET: 260 OF 335
DRAWING: E-21

PERMITTING

PLOT DATE: 6/10/2014 12:12 PM BY: MS

XREFs= ..\Block\44238-004-BP3-TB,..\44238-004BP3-E08,..\Base-BP3\S-BP1-Filters-Plan-Bottom-X,..\Base-BP3\M-BP1-Filters-Plan-Bottom-X

File = H:\44238-004\Drawings\Bid Package 3 - WTP Rehab\Electrical\44238-004BP3-E21 Saved by HScaff Save date = 6/9/2014 9:07 PM

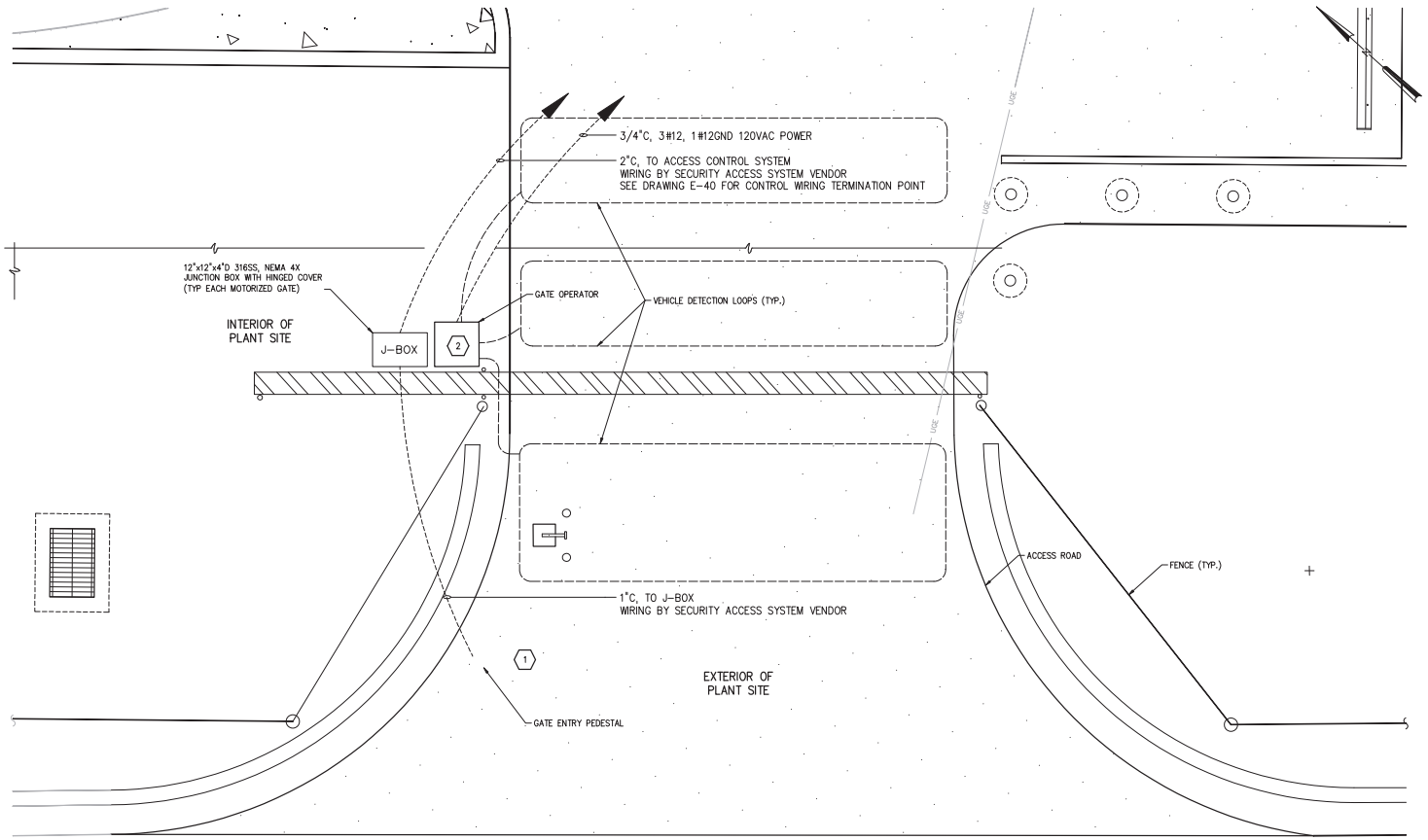

PLAN VIEW
MOTORIZED GATE WITH VEHICLE DETECTION LOOP
NTS

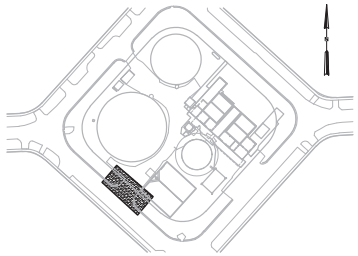

LOCATION MAP

GENERAL NOTES:

1. THIS DRAWING SHOWS MOTORIZED GATE NO. 2. THE VEHICLE DETECTION LOOPS AT OTHER MOTORIZED GATES ARE SIMILAR.
2. APPROXIMATE LOCATIONS OF GATE ACCESS EQUIPMENT IS SHOWN ON DRAWING E-39.

KEYED NOTES:

1. SEE CIVIL DRAWINGS FOR DETAILED LOCATIONS OF GATE ENTRY PEDESTALS AND GATE EXIT PEDESTALS (TYPICAL FOR ALL MOTORIZED GATES).
2. LOCATIONS OF GATE OPERATORS VARY FOR EACH MOTORIZED GATE. SEE CIVIL DRAWINGS FOR PROPOSED GATE OPERATOR LOCATIONS.

NO.	DATE	ISSUED FOR	BY

DESIGNED G.A.B.
DRAWN G.P.B.
CHECKED J.N.M.
PROJ. ENGR. G.A.B.

JOHN C. BURKE P.E.
No. 17301

HAZEN AND SAWYER
Environmental Engineers & Scientists
4000 Hollywood Boulevard, Suite 750N
Hollywood, Florida 33021
Certificate of Authorization Number: 2771

SCALE NTS

CLIENTS PROJECT: –
ENGINEERS PROJECT: 44238-004
CAD REFERENCE: 44238-004BP3-E22

NORTH MIAMI FLORIDA
CITY OF NORTH MIAMI
PUBLIC WORKS UTILITIES

WINSON WATER TREATMENT PLANT
BID PACKAGE 3: WTP REHABILITATION
SECURITY ACCESS
ELECTRICAL DETAILS
SHEET 3

DATE: JUNE 2014
SHEET: 261 OF 335
DRAWING: E-22

PERMITTING

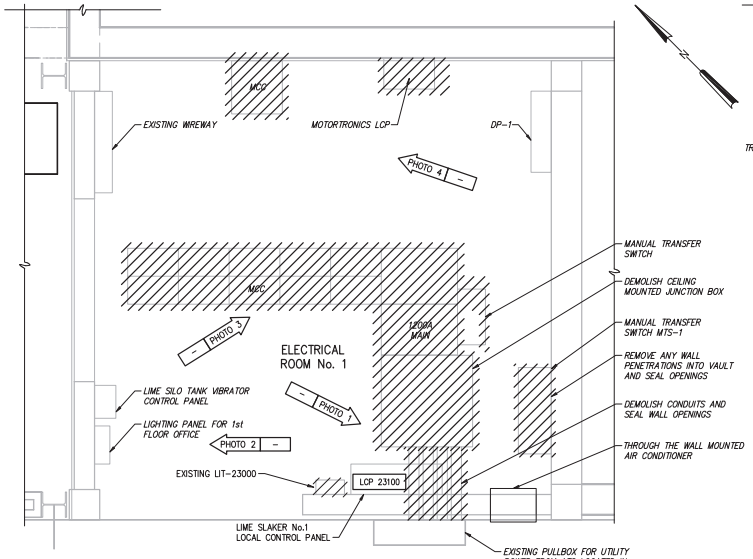

ELECTRIC ROOM DEMOLITION PLAN
1/2" = 1'-0"

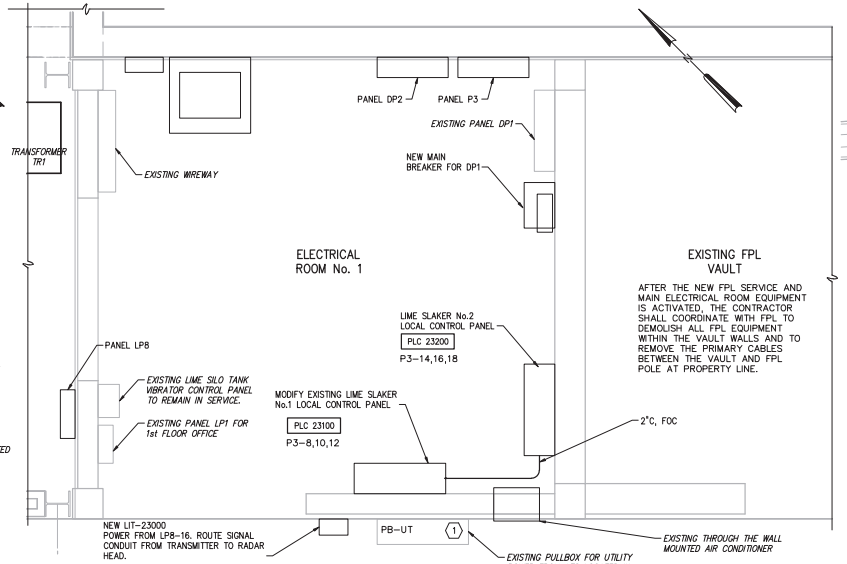

ELECTRIC ROOM – PROPOSED PLAN
1/2" = 1'-0"

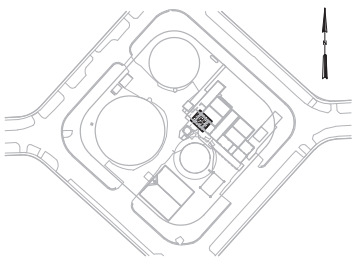

LOCATION MAP

KEYED NOTES:

1. AFTER THE MAIN ELECTRICAL ROOM IS COMPLETED AND ACTIVATED THE CONTRACTOR SHALL REMOVE, AND DELIVER TO THE OWNER, EXISTING WIRING BETWEEN THE EXISTING UTILITY PULL BOX AND THE EXISTING ATS.

   CONTRACTOR SHALL REMOVE CONDUITS BETWEEN THE PULL BOX PB-UT AND EXISTING MAIN ELECTRICAL SWITCHGEAR IN EXISTING ELECTRICAL ROOM 1.

   CONTRACTOR SHALL PLUG ALL OPENINGS IN PULL BOX.

   SEE DRAWING E-24 FOR ADDITIONAL DETAILS.

GENERAL NOTES:

1. LIMITED RECORD DRAWINGS EXIST FOR THIS STRUCTURE AND/OR AREA. PHOTOS PROVIDED FOR GENERAL INFORMATION PURPOSES.
2. THE CONTRACTOR SHALL FIELD VERIFY ALL EXISTING CONDITIONS PRIOR TO BID PER THE REQUIREMENTS OF DIVISION 1 OF THE SPECIFICATIONS.
3. CONTRACTOR RETAINS FULL RESPONSIBILITY FOR FIELD VERIFICATION OF ALL ABOVE GROUND IMPROVEMENTS TO BE REMOVED FOR THIS WORK. SUCH VERIFICATION SHALL INCLUDE: STRUCTURAL, ARCHITECTURAL, HVAC, PLUMBING, ELECTRICAL, IRRIGATION, CONTROLS, FREE STANDING EQUIPMENT, LANDSCAPING, AND ANY AND ALL OTHER EXISTING IMPROVEMENTS WITHIN THE BOUNDARY OF THE WORK WHETHER SHOWN HEREIN OR NOT.
4. FOR BELOW GRADE IMPROVEMENTS TO BE REMOVED REFERENCE APPLICABLE CIVIL AND ELECTRICAL DRAWINGS ACCORDINGLY.
5. REFER TO SPECIFICATION SECTION ENTITLED "DEMOLITION OF EXISTING FACILITIES".
6. PRE-BID ACCESS TO THE SITE SHALL BE COORDINATED BY THE CONTRACTOR UPON REQUEST THROUGH A CONTACT TO BE DETERMINATED AT THE CITY OF NORTH MIAMI.
7. ALL OPEN WALL PENETRATIONS SHALL BE SEALED

LEGEND:

PHOTO # – ARROW INDICATES DIRECTION AND POINT OF VIEW OF PHOTO

EXISTING

PROPOSED

TO BE REMOVED

1/2"=1'-0" 12" 0 1 3'

ELECTRICAL ROOM NO. 1 – PHOTO 1
NTS

ELECTRICAL ROOM NO. 1 – PHOTO 2
NTS

ELECTRICAL ROOM NO. 1 – PHOTO 3
NTS

ELECTRICAL ROOM NO. 1 – PHOTO 4
NTS

NO.	DATE	ISSUED FOR	BY
1	4-1-14	100% QA COMMENTS	H.J.V.

DESIGNED J.M.B.
DRAWN G.P.B.
CHECKED J.C.B.
PROJ. ENGR. J.C.B.

JOHN C. BURKE P.E.
No. 17301

HAZEN AND SAWYER
Environmental Engineers & Scientists
4000 Hollywood Boulevard, Suite 750N
Hollywood, Florida 33021
Certificate of Authorization Number: 2771

SCALE: AS NOTED

CLIENTS PROJECT: –
ENGINEERS PROJECT: 44238-004
CAD REFERENCE: 44238-004BP3-E23

NORTH MIAMI FLORIDA
CITY OF NORTH MIAMI
PUBLIC WORKS UTILITIES

WINSON WATER TREATMENT PLANT
BID PACKAGE 3: WTP REHABILITATION
ELECTRICAL ROOM 1 DEMOLITION AND PROPOSED PLAN

DATE: JUNE 2014
SHEET: 262 OF 335
DRAWING: E-23

PERMITTING

PLOT DATE: 6/10/2014 12:15 PM BY: JKS

XREFs= ..\Block\44238-004-BP3-TB,..\Base-BP3\S-BP1-Filters-Plan-Bottom-X,..\Base-BP3\M-BP1-Filters-Plan-Bottom-X,H:\44238-004\Drawings\Bid Package 3 - WTP Rehab\Base-BP3\M-BP3-Filters-Plan-Bottom

File = H:\44238-004\Drawings\Bid Package 3 - WTP Rehab\Electrical\44238-004BP3-E23 Saved by jbrood Save date = 6/9/2014 8:12 PM

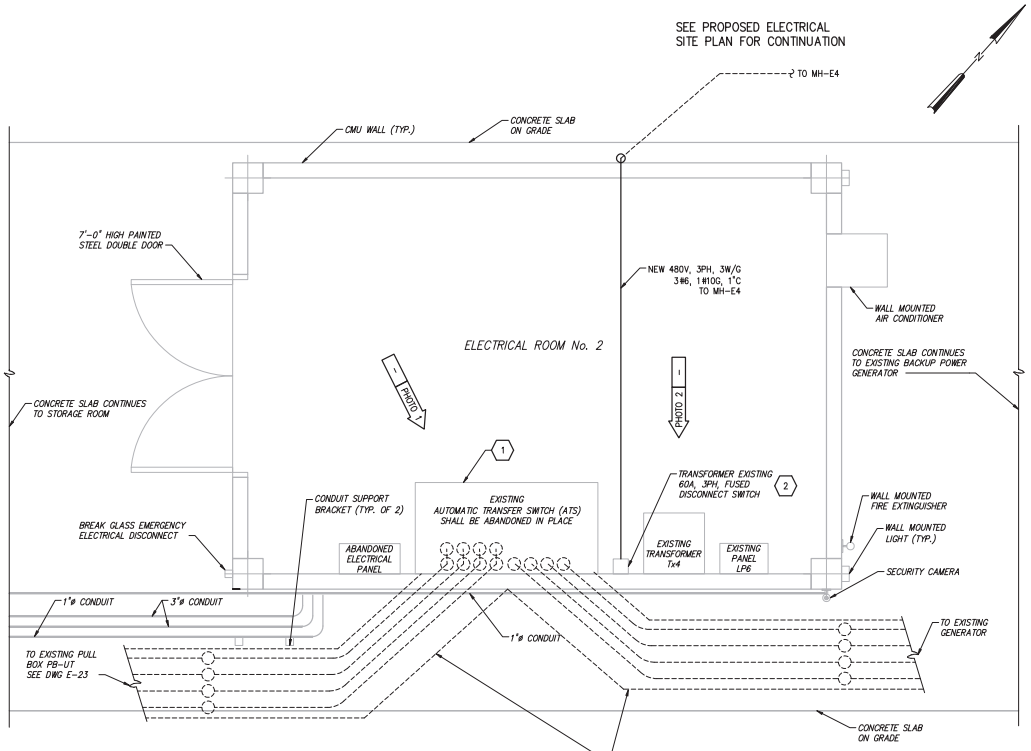

ELECTRICAL ROOM 2
1/2" = 1'-0"

1. EXISTING UNDERGROUND CONCRETE ENCASED DUCT BANKS FOR EXISTING FPL UTILITY POWER AND GENERATOR POWER ROUTINGS.
2. THE WIRING WITHIN THESE CONDUITS SHALL BE DEMOLISHED AT THE APPROPRIATE SEQUENCE OF CONSTRUCTION AFTER NEW ELECTRICAL ROOM HAS BEEN APPROVED AND ACTIVATED.
3. CONDUITS SHALL HAVE NEW PULLING LINES INSTALLED DURING DEMOLITION.
4. CONDUITS SHALL THEN BE SEALED AT EACH END WITH AN EXPANSION TYPE FOAM.

ELECTRICAL ROOM NO. 2 – PHOTO NO. 1
NTS

ELECTRICAL ROOM NO. 2 – PHOTO NO. 2
NTS

GENERAL NOTES:

1. ROOM HEIGHT IS APPROXIMATELY 10'-11".
2. ALL DIMENSIONS ARE APPROXIMATE.
3. NO RECORD DRAWINGS EXIST FOR THIS STRUCTURE AND/OR AREA. PHOTOS PROVIDED FOR GENERAL INFORMATION PURPOSES.
4. THE CONTRACTOR SHALL FIELD VERIFY ALL EXISTING CONDITIONS PRIOR TO BID PER THE REQUIREMENTS OF DIVISION 1 OF THE SPECIFICATIONS.
5. CONTRACTOR RETAINS FULL RESPONSIBILITY FOR FIELD VERIFICATION OF ALL ABOVE GROUND IMPROVEMENTS TO BE REMOVED FOR THIS WORK. SUCH VERIFICATION SHALL INCLUDE: STRUCTURAL, ARCHITECTURAL, HVAC, PLUMBING, ELECTRICAL, IRRIGATION, CONTROLS, FREE STANDING EQUIPMENT, LANDSCAPING, AND ANY AND ALL OTHER EXISTING IMPROVEMENTS WITHIN THE BOUNDARY OF THE WORK WHETHER SHOWN HEREIN OR NOT.
6. FOR BELOW GRADE IMPROVEMENTS TO BE REMOVED REFERENCE APPLICABLE CIVIL AND ELECTRICAL DRAWINGS ACCORDINGLY.
7. REFER TO SPECIFICATION SECTION ENTITLED "DEMOLITION OF EXISTING FACILITIES".
8. PRE-BID ACCESS TO THE SITE SHALL BE COORDINATED BY THE CONTRACTOR UPON REQUEST THROUGH A CONTACT TO BE DETERMINATED AT THE CITY OF NORTH MIAMI.

KEYED NOTES:

1. EXISTING AUTOMATIC TRANSFER SWITCH SHALL BE ABANDONED IN PLACE AFTER THE NEW MAIN ELECTRICAL ROOM HAS BEEN COMPLETED AND ENERGIZED.
2. RE-FEED THE EXISTING TRANSFORMER DISCONNECT SWITCH FROM THE NEW MAIN ELECTRICAL ROOM VIA MH-E4.

LEGEND:

PHOTO # – ARROW INDICATES DIRECTION AND POINT OF VIEW OF PHOTO
EXISTING
PROPOSED

1/2"=1'-0" 12" 0 1 3'

NO.	DATE	ISSUED FOR	BY

DESIGNED J.M.B.
DRAWN C.A.Z.
CHECKED J.C.B.
PROJ. ENGR. J.C.B.

JOHN C. BURKE P.E. No.17301

HAZEN AND SAWYER
Environmental Engineers & Scientists
4000 Hollywood Boulevard, Suite 750N
Hollywood, Florida 33021
Certificate of Authorization Number: 2771

SCALE 1/2"=1'-0"

CLIENTS PROJECT: –
ENGINEERS PROJECT: 44238-004
CAD REFERENCE: 44238-004BP3-E24

NORTH MIAMI FLORIDA
CITY OF NORTH MIAMI
PUBLIC WORKS UTILITIES

WINSON WATER TREATMENT PLANT
BID PACKAGE 3: WTP REHABILITATION
ELECTRICAL ROOM 2
EQUIPMENT MODIFICATIONS

DATE: JUNE 2014
SHEET: 263 OF 335
DRAWING: E-24

PERMITTING

PLOT DATE: 6/10/2014 12:17 PM BY: IKS

XREFs= ..\Tblock\44238-004-BP3-TB,..\Base-BP3\S-BP3-ElecRoom2-Plan-X,..\Base-BP3\E-BP3-ElecRoom2-Plan-X,..\Base-BP3\E-BP3-ElectricalRoom2-Plan

File = H:\44238-004\Drawings\Bid Package 3 - WTP Rehab\Electrical\44238-004BP3-E24 Saved by jbroad Save date = 6/9/2014 6:51 PM

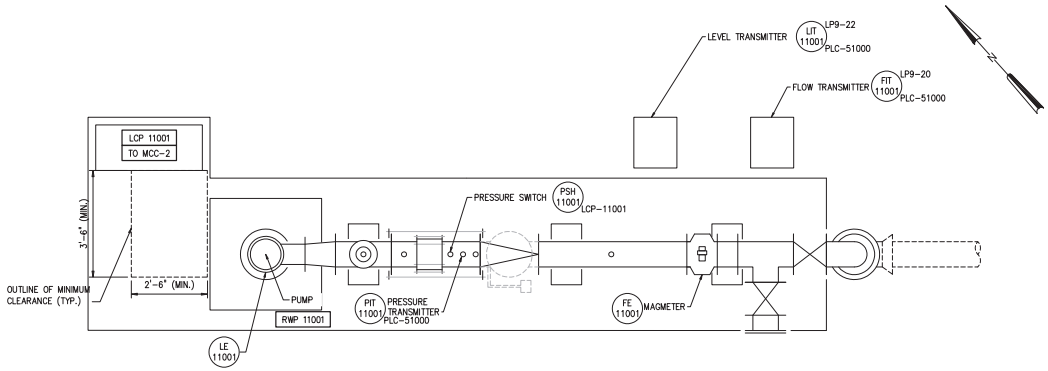

RAW WATER WELL NO. 1 – PLAN
1/2" = 1'-0"

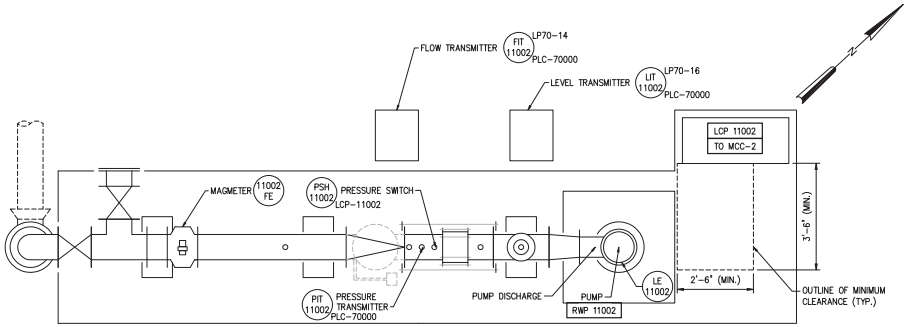

RAW WATER WELL NO. 2 – PLAN
1/2" = 1'-0"

LEGEND

FIT 11001 — POWER SOURCE
LCP OR PLC

1/2"=1'-0"

12" 0 1 3'

NO.	DATE	ISSUED FOR	BY

DESIGNED J.M.B.
DRAWN G.P.B.
CHECKED J.C.B.
PROJ. ENGR. J.C.B.

JOHN C. BURKE P.E.
No. 17301

HAZEN AND SAWYER
Environmental Engineers & Scientists
4000 Hollywood Boulevard, Suite 750N
Hollywood, Florida 33021
Certificate of Authorization Number: 2771

SCALE 1/2"=1'-0"

CLIENTS PROJECT: –
ENGINEERS PROJECT: 44238-004
CAD REFERENCE: 44238-004BP3-E25

NORTH MIAMI FLORIDA
CITY OF NORTH MIAMI
PUBLIC WORKS UTILITIES

WINSON WATER TREATMENT PLANT
BID PACKAGE 3: WTP REHABILITATION
RAW WATER WELL NOS. 1 AND 2
POWER AND LIGHTING PLAN

DATE: JUNE 2014
SHEET: 264 OF 335
DRAWING: E-25

PERMITTING

PLOT DATE: 6/10/2014 12:19 PM BY: IAS

XREFs= ..\Block\44238-004-BP3-TB,..\Base-BP3\M-BP3-WellPumpNo2-Plan,..\Base-BP3\M-BP3-WellPumpNo1-Plan

File = H:\44238-004\Drawings\Bid Package 3 - WTP Rehab\Electrical\44238-004BP3-E25 Saved by HScalll Save date = 6/9/2014 9:17 PM

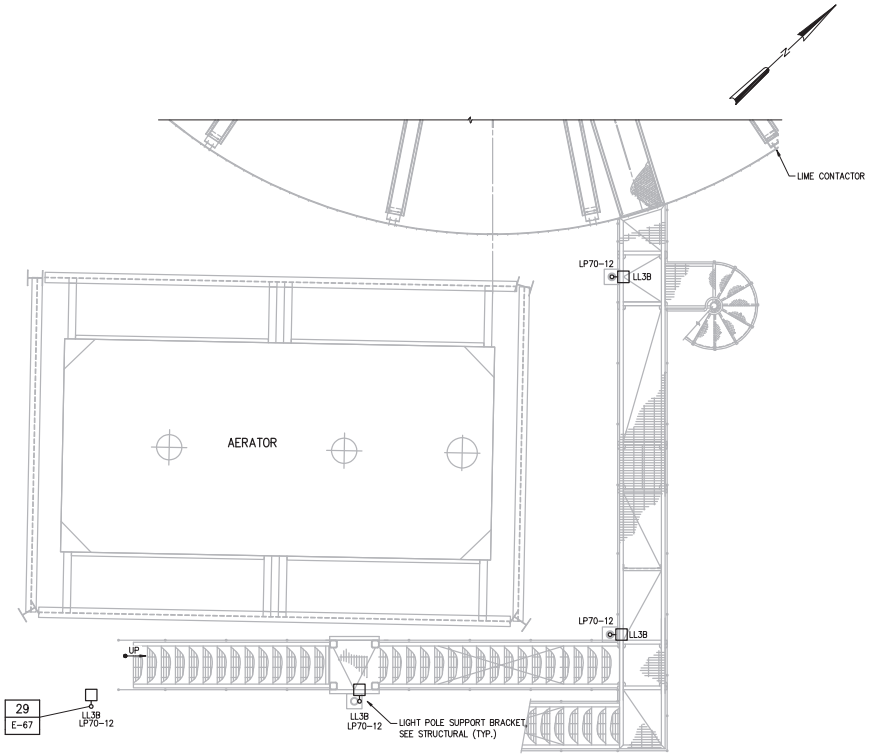

INTERMEDIATE PLAN
1/4"=1'-0"

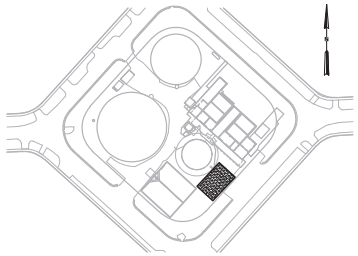

LOCATION MAP

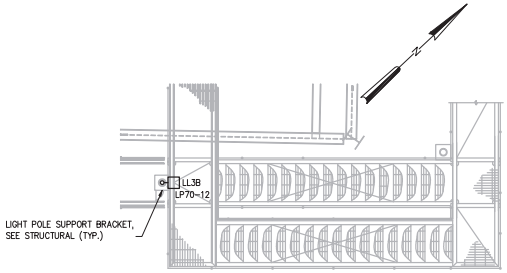

UPPER PLAN
1/4"=1'-0"

1/4"=1'-0"

1 0 1 2 3 7'

NO.	DATE	ISSUED FOR	BY

DESIGNED J.M.B.
DRAWN G.P.B.
CHECKED J.C.B.
PROJ. ENGR. J.C.B.

JOHN C. BURKE P.E.
No. 17301

HAZEN AND SAWYER
Environmental Engineers & Scientists
4000 Hollywood Boulevard, Suite 750N
Hollywood, Florida 33021
Certificate of Authorization Number: 2771

SCALE 1/4"=1'-0"

CLIENTS PROJECT: –
ENGINEERS PROJECT: 44238-004
CAD REFERENCE: 44238-004BP3-E26

NORTH MIAMI FLORIDA
CITY OF NORTH MIAMI
PUBLIC WORKS UTILITIES

WINSON WATER TREATMENT PLANT
BID PACKAGE 3: WTP REHABILITATION
AERATOR / LIME CONTACTOR ACCESS STAIRS
POWER AND LIGHTING PLAN

DATE: JUNE 2014
SHEET: 265 OF 335
DRAWING: E-26

PERMITTING

PLOT DATE: 6/10/2014 12:20 PM BY: IKS

XREFs= ..\Block\44238-004-BP3-TB,..\Base-BP3\S-BP3-AeratorLime Access-Plan

File = H:\44238-004\Drawings\Bid Package 3 - WTP Rehab\Electrical\44238-004BP3-E26 Saved by HScalll Save date = 6/9/2014 8:14 PM

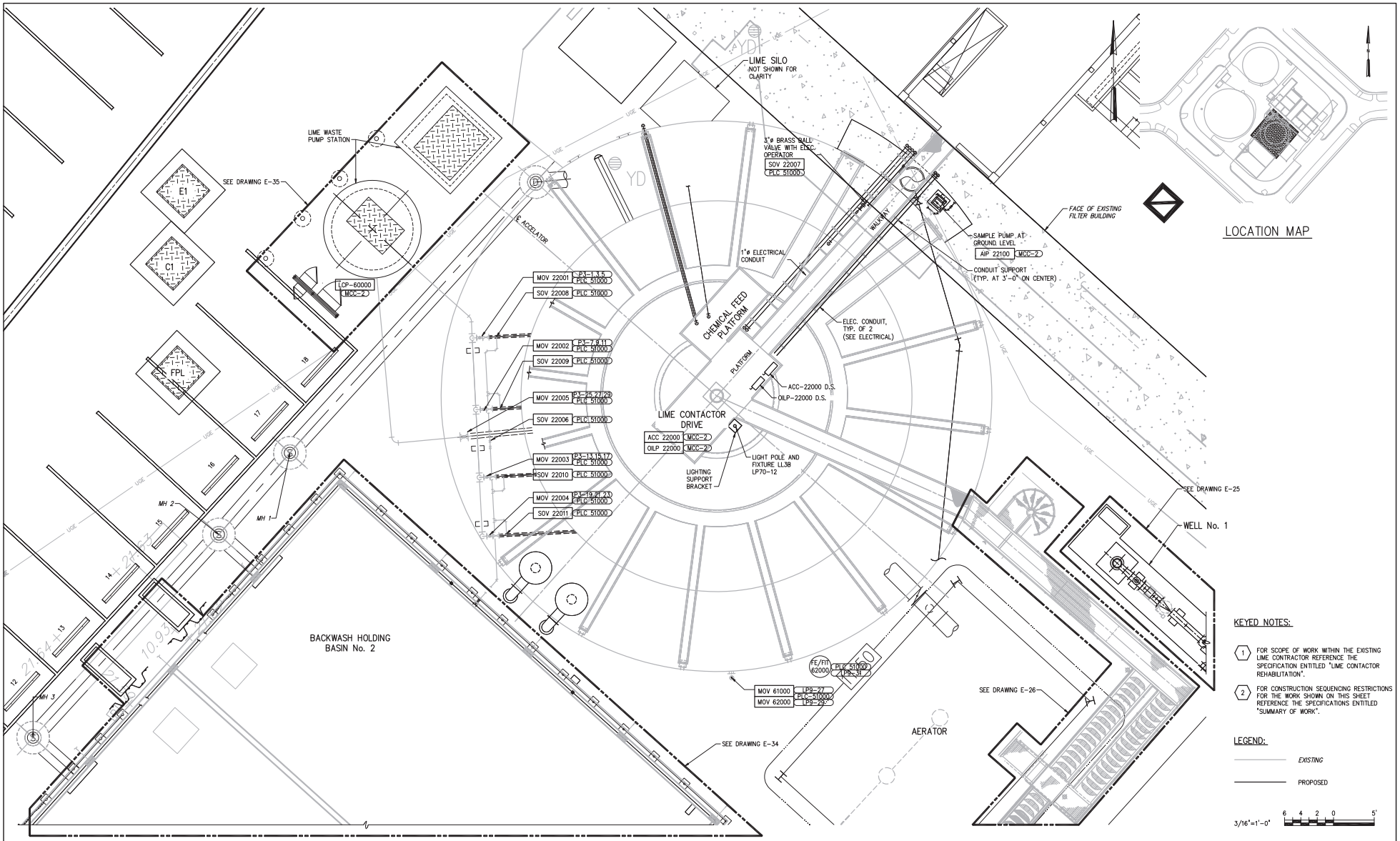

NO.	DATE	ISSUED FOR	BY

DESIGNED J.M.B.
DRAWN G.P.B.
CHECKED J.C.B.
PROJ. ENGR. J.C.B.

JOHN C. BURKE P.E.
No. 17301

HAZEN AND SAWYER
Environmental Engineers & Scientists
4000 Hollywood Boulevard, Suite 750N
Hollywood, Florida 33021
Certificate of Authorization Number: 2771

SCALE 3/16"=1'-0"

CLIENTS PROJECT: –
ENGINEERS PROJECT: 44238-004
CAD REFERENCE: 44238-004BP3-E27

NORTH MIAMI FLORIDA
CITY OF NORTH MIAMI
PUBLIC WORKS UTILITIES

WINSON WATER TREATMENT PLANT
BID PACKAGE 3: WTP REHABILITATION

LIME CONTACTOR POWER AND LIGHTING PLAN

DATE: JUNE 2014
SHEET: 266 OF 335
DRAWING: E-27

PERMITTING

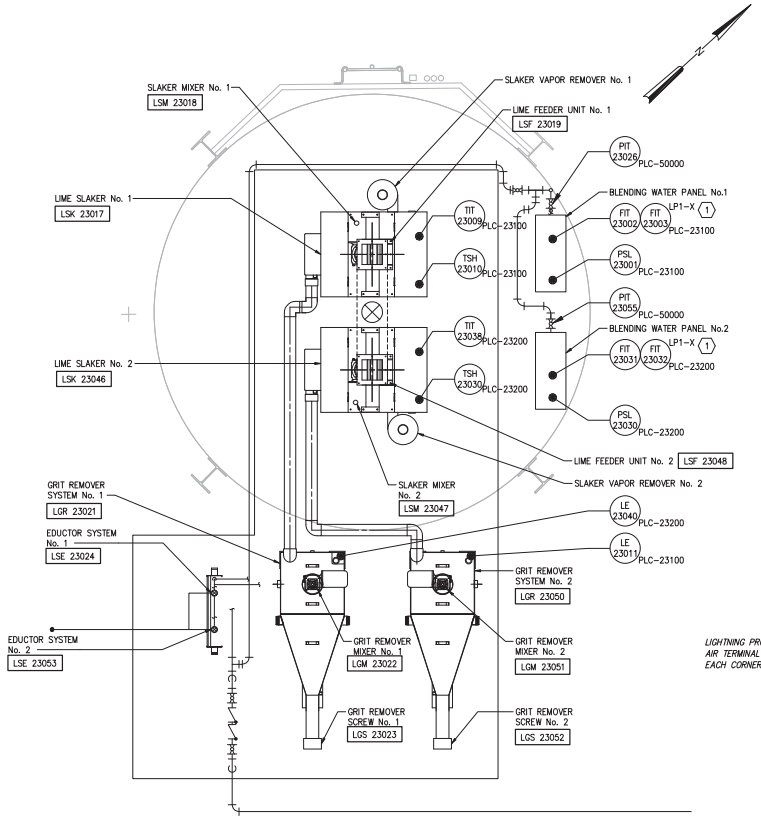

LOWER PLAN
1/2" = 1'-0"

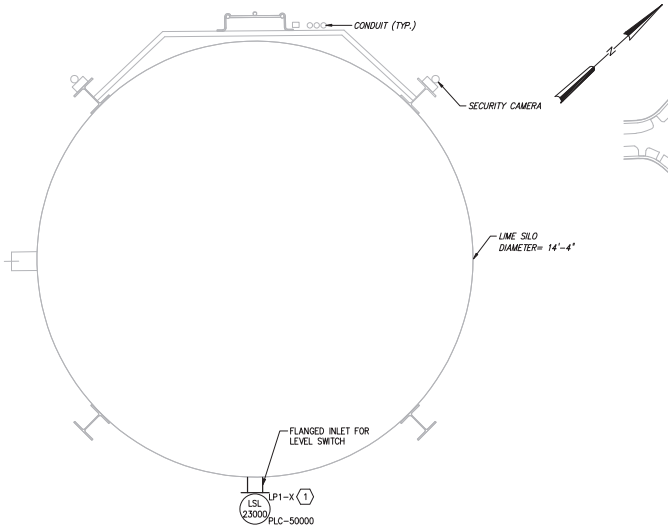

INTERMEDIATE PLAN
1/2" = 1'-0"

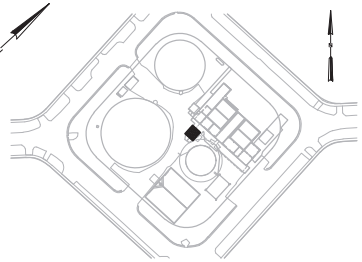

LOCATION MAP

1 LP1 IS AN EXISTING PANEL LOCATED IN ELECTRIC ROOM NO.1. THE CONTRACTOR SHALL DETERMINE LP1 CIRCUIT FEEDING DEVICE RE-LABEL PANEL ACCORDINGLY.

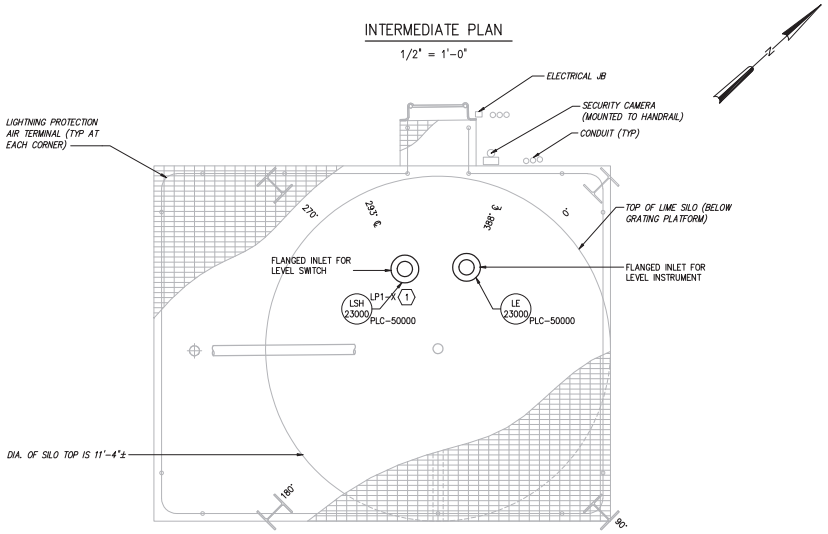

UPPER PLAN AT 45 FEET ± ABOVE GROUND SURFACE
1/2" = 1'-0"

LEGEND:
EXISTING
PROPOSED

1/2"=1'-0" 12" 0 1 3'

NO.	DATE	ISSUED FOR	BY
1	4-1-14	100% QA COMMENTS	H.J.V.

DESIGNED J.M.B.
DRAWN G.P.B.
CHECKED J.C.B.
PROJ. ENGR. J.C.B.

JOHN C. BURKE P.E.
No. 17301

HAZEN AND SAWYER
Environmental Engineers & Scientists
4000 Hollywood Boulevard, Suite 750N
Hollywood, Florida 33021
Certificate of Authorization Number: 2771

SCALE 1/2"=1'-0"

CLIENTS PROJECT: –
ENGINEERS PROJECT: 44238-004
CAD REFERENCE: 44238-004BP3-E28

NORTH MIAMI FLORIDA
CITY OF NORTH MIAMI
PUBLIC WORKS UTILITIES

WINSON WATER TREATMENT PLANT
BID PACKAGE 3: WTP REHABILITATION
LIME SLAKER AND SILO MODIFICATIONS
POWER AND LIGHTING PLAN

DATE: JUNE 2014
SHEET: 267 OF 335
DRAWING: E-28

PERMITTING

PLOT DATE: 6/10/2014 12:23 PM BY: JKS

XREFs= ..\Tblock\44238-004-BP3-TB,..\Base-BP3\M-BP3-LimeSilo-Plans-X,..\Base-BP3\M-BP3-LimeSilo-Plans-S,..\Base-BP3\M-BP3-LimeSlaker-Plan

File = H:\44238-004\Drawings\Bid Package 3 - WTP Rehab\Electrical\44238-004BP3-E28 Saved by jbrood Save date = 6/9/2014 6:22 PM

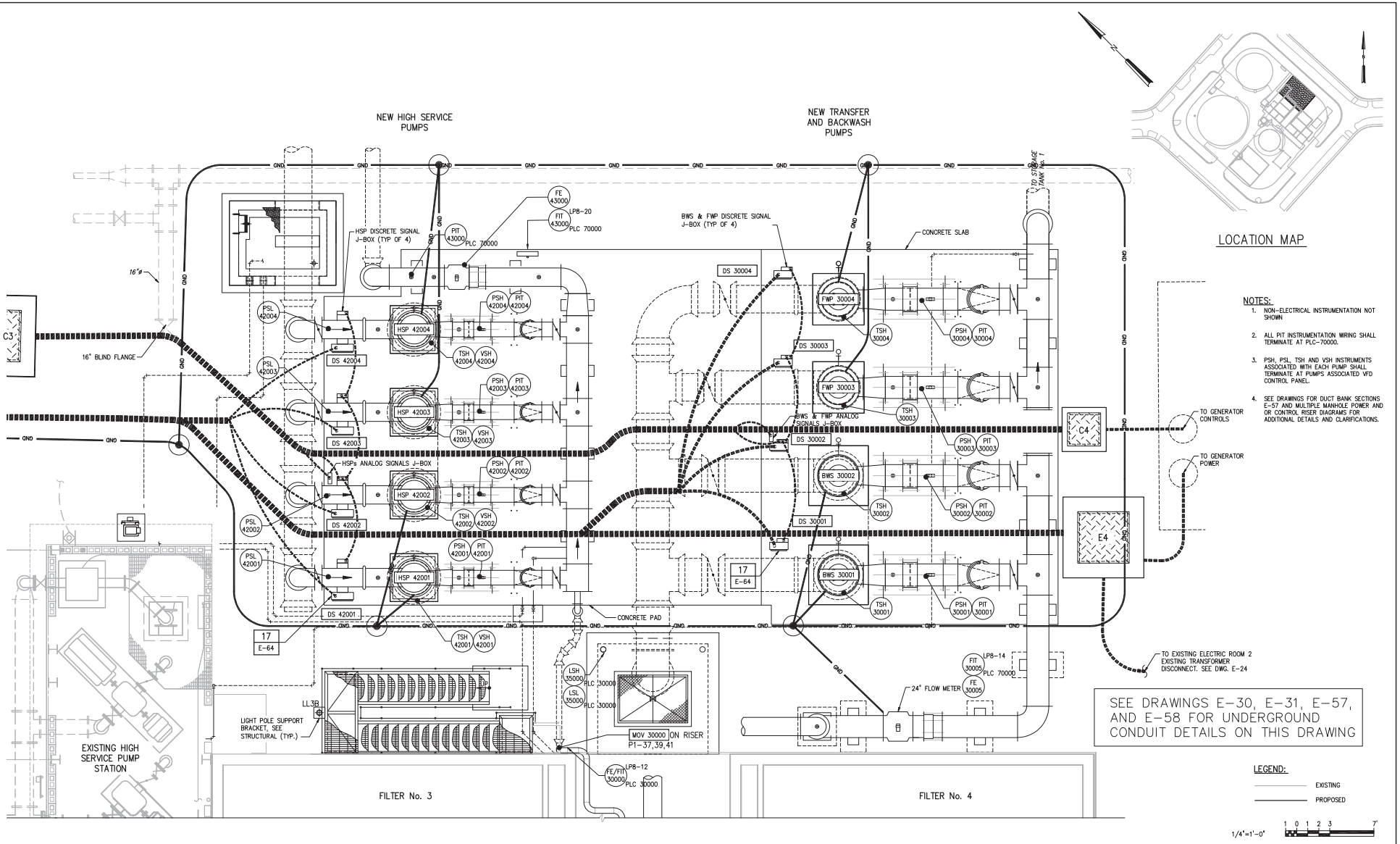

NOTES:

1. NON-ELECTRICAL INSTRUMENTATION NOT SHOWN
2. ALL PIT INSTRUMENTATION WIRING SHALL TERMINATE AT PLC-70000.
3. PSH, PSL, TSH AND VSH INSTRUMENTS ASSOCIATED WITH EACH PUMP SHALL TERMINATE AT PUMPS ASSOCIATED VFD CONTROL PANEL.
4. SEE DRAWINGS FOR DUCT BANK SECTIONS E-57 AND MULTIPLE MANHOLE POWER AND OR CONTROL RISER DIAGRAMS FOR ADDITIONAL DETAILS AND CLARIFICATIONS.

NO.	DATE	ISSUED FOR	BY
1	4-1-14	100% QA COMMENTS	H.J.V.

DESIGNED J.M.B.
DRAWN G.P.B.
CHECKED J.C.B.
PROJ. ENGR. J.C.B.

JOHN C. BURKE P.E.
No. 17301

HAZEN AND SAWYER
Environmental Engineers & Scientists
4000 Hollywood Boulevard, Suite 750N
Hollywood, Florida 33021
Certificate of Authorization Number: 2771

SCALE 1/4"=1'-0"

CLIENTS PROJECT: -
ENGINEERS PROJECT: 44238-004
CAD REFERENCE: 44238-004BP3-E29

NORTH MIAMI FLORIDA
CITY OF NORTH MIAMI
PUBLIC WORKS UTILITIES

WINSON WATER TREATMENT PLANT
BID PACKAGE 3: WTP REHABILITATION
MASTER PUMP STATION POWER AND LIGHTING PLAN

DATE: JUNE 2014
SHEET: 268 OF 335
DRAWING: E-29

PERMITTING

PLOT DATE: 6/10/2014 12:24 PM BY: HS

XREFs= ..\Tblock\44238-004-BP3-TB,..\Base-BP3\E-BP3-HSPS-Plan,..\Base-BP3\MN-BP3-HSPS-PLAN (Alt 2),..\Base-BP3\M-BP1-Filters-Plan-Bottom-X,..\Base-BP3\S-BP1-Filters-Plan-Bottom-X,..\Base-BP3\S-BP3-HSPS-PLAN,..\Base-BP3\S-BP3-ChemHand-Plan,..\Base-BP3\M-BP3-ChemHand-Plan,..\Base-BP3\S-BP3-ChemInPoint-Plan,..\Base-BP3\E-BP3-SiteElec-Prop

File = H:\44238-004\Drawings\Bid Package 3 - WTP Rehab\Electrical\44238-004BP3-E29 Saved by jbrood Save date = 6/9/2014 6:33 PM

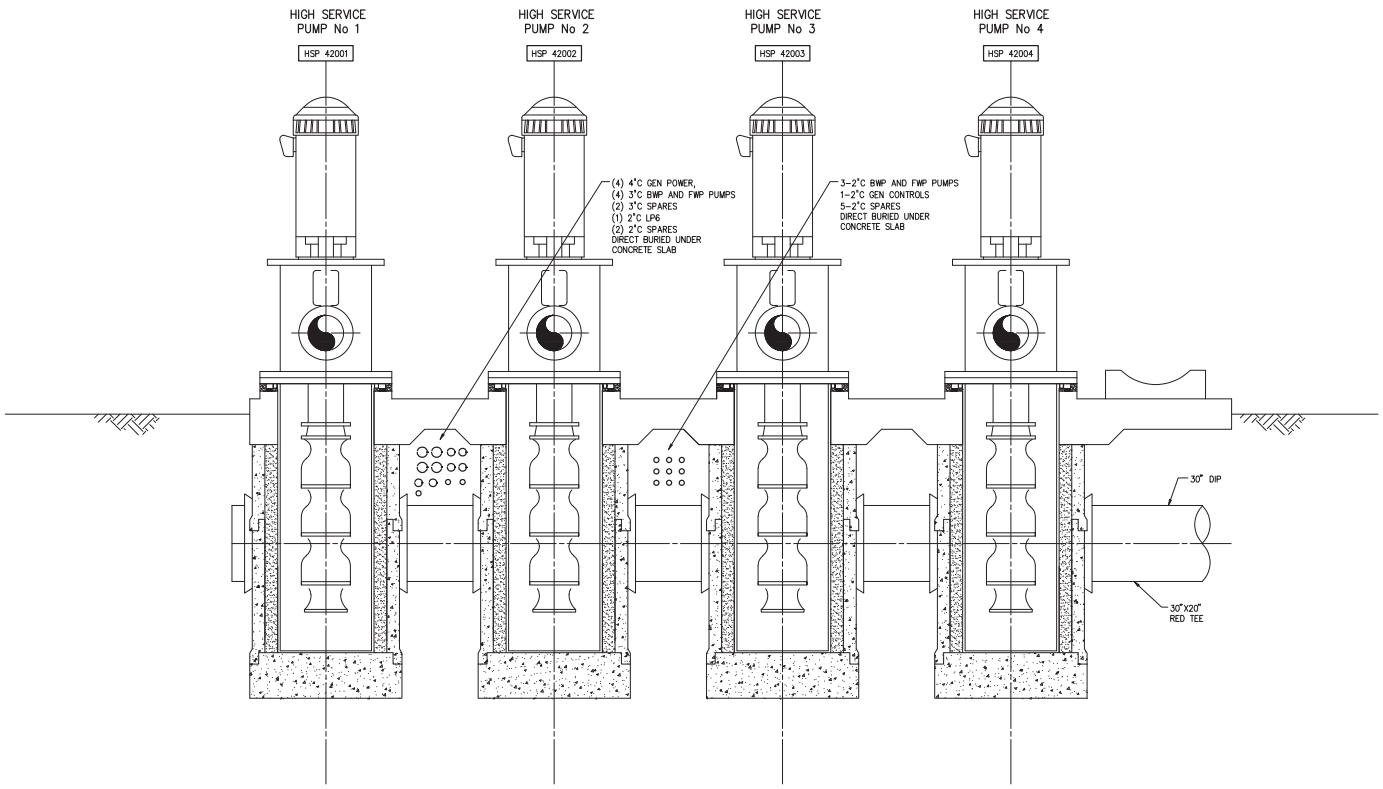

SECTION P3/C3 E-57
1/2"=1'-0"

NOTES:

1. MINIMUM DEPTH OF PUMP SHOWN ACTUAL PUMP AND CAN DIMENSION TO BE DETERMINED BY PUMP MANUFACTURER

LEGEND:

EXISTING
PROPOSED

1/2"=1'-0" 12" 0 1 3'

NO.	DATE	ISSUED FOR	BY
1	4-1-14	100% QA COMMENTS	H.J.V.

DESIGNED J.M.B.
DRAWN G.P.B.
CHECKED J.C.B.
PROJ. ENGR. J.C.B.

JOHN C. BURKE P.E.
No. 17301

HAZEN AND SAWYER
Environmental Engineers & Scientists
4000 Hollywood Boulevard, Suite 750N
Hollywood, Florida 33021
Certificate of Authorization Number: 2771

SCALE 1/2"=1'-0"

CLIENTS PROJECT: –
ENGINEERS PROJECT: 44238-004
CAD REFERENCE: 44238-004BP3-E30

NORTH MIAMI FLORIDA
CITY OF NORTH MIAMI
PUBLIC WORKS UTILITIES

WINSON WATER TREATMENT PLANT
BID PACKAGE 3: WTP REHABILITATION
HIGH SERVICE PUMPS SECTION

DATE: JUNE 2014
SHEET: 269 OF 335
DRAWING: E-30

PERMITTING

PLOT DATE: 6/10/2014 12:25 PM BY: HS

XREFs= ..\Tblock\44238-004-BP3-TB,..\Base-BP3\S-BP3-HSPS-SECT,..\Base-BP3\M-BP3-HSPS-SECT,..\Base-BP3\S-BP3-Filters-Sections,..\Base-BP3\S-BP3-HSPS-PLAN

File = H:\44238-004\Drawings\Bid Package 3 - WTP Rehab\Electrical\44238-004BP3-E30 Saved by jbrood Save date = 6/9/2014 7:36 PM

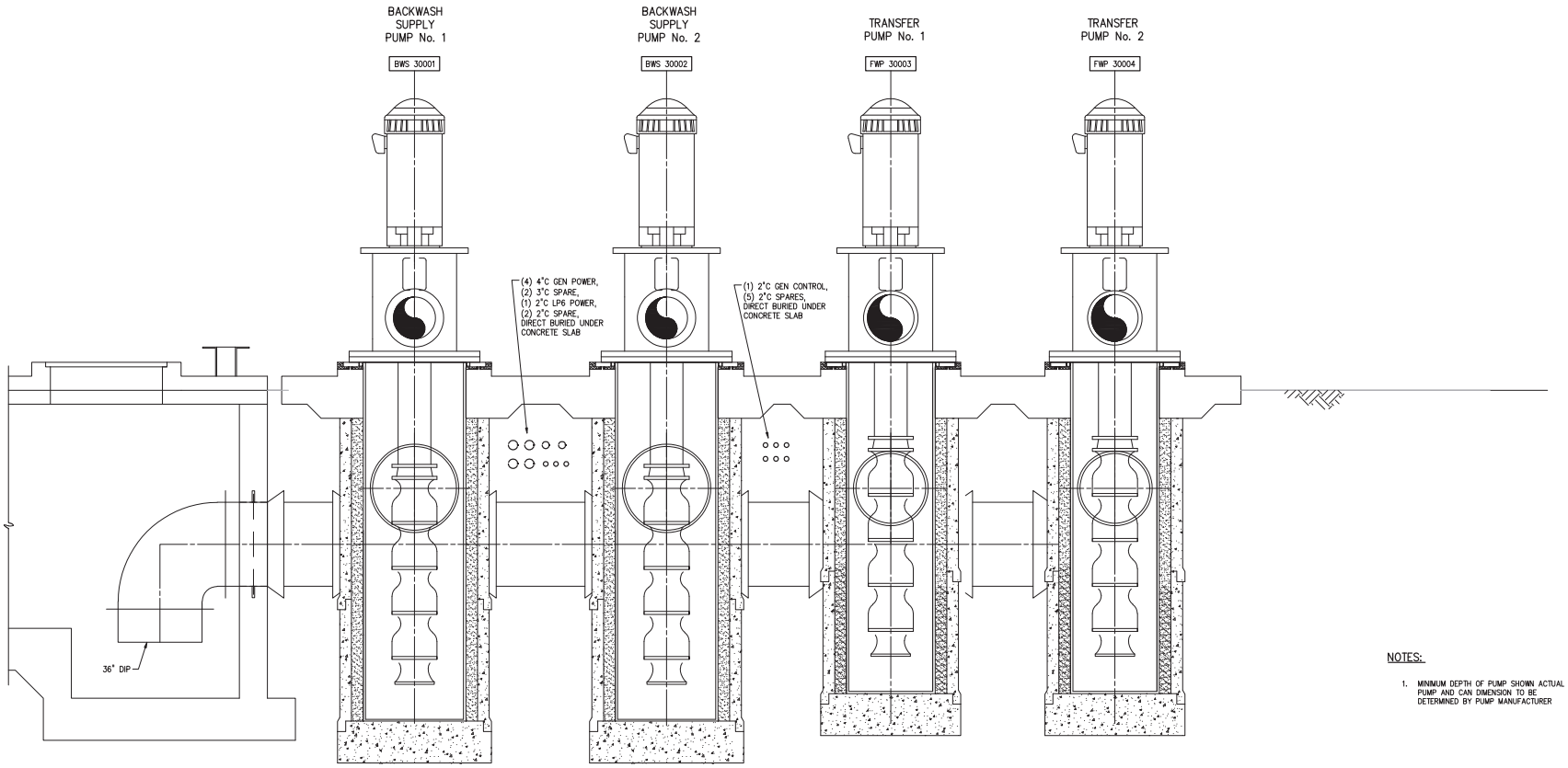

SECTION P5/C5 E-57
1/2"=1'-0"

NOTES:

1. MINIMUM DEPTH OF PUMP SHOWN ACTUAL PUMP AND CAN DIMENSION TO BE DETERMINED BY PUMP MANUFACTURER

LEGEND:

EXISTING
PROPOSED

1/2"=1'-0"

NO.	DATE	ISSUED FOR	BY
1	4-1-14	100% QA COMMENTS	H.J.V.

DESIGNED J.M.B.
DRAWN G.P.B.
CHECKED J.C.B.
PROJ. ENGR. J.C.B.

JOHN C. BURKE P.E.
No. 17301

HAZEN AND SAWYER
Environmental Engineers & Scientists
4000 Hollywood Boulevard, Suite 750N
Hollywood, Florida 33021
Certificate of Authorization Number: 2771

SCALE 1/2"=1'-0"

CLIENTS PROJECT: –
ENGINEERS PROJECT: 44238-004
CAD REFERENCE: 44238-004BP3-E31

NORTH MIAMI FLORIDA
CITY OF NORTH MIAMI
PUBLIC WORKS UTILITIES

WINSON WATER TREATMENT PLANT
BID PACKAGE 3: WTP REHABILITATION
BACKWASH AND TRANSFER PUMPS SECTION

DATE: JUNE 2014
SHEET: 270 OF 335
DRAWING: E-31

PERMITTING

PLOT DATE: 6/10/2014 12:36 PM BY: JAS

XREFs= ..\Titlock\44238-004-BP3-TB,..\Base-BP3\S-BP3-HSPS-SECT,..\Base-BP3\M-BP3-HSPS-SECT,..\Base-BP3\S-BP3-Filters-Sections,..\Base-BP3\S-BP3-HSPS-PLAN

File = H:\44238-004\Drawings\Bid Package 3 - WTP Rehab\Electrical\44238-004BP3-E31 Saved by jbrood Save date = 6/9/2014 6:05 PM

INTERIM CHEMICAL EQUIPMENT ELECTRICAL			
ID	EQUIPMENT NAME	HP	VOLTAGE
AMP 56100	AMMONIA METERING PUMP	1/4	120V
CAP 56200	COAGULANT AID METERING PUMP	1/4	120V
MIX 56201	COAGULANT AID MIXER	1/4	120V
FLP 56300	FLUORIDE METERING PUMP	1/4	120V
FDS 56300	FLUORIDE DRUM SCALE	1/4	120V

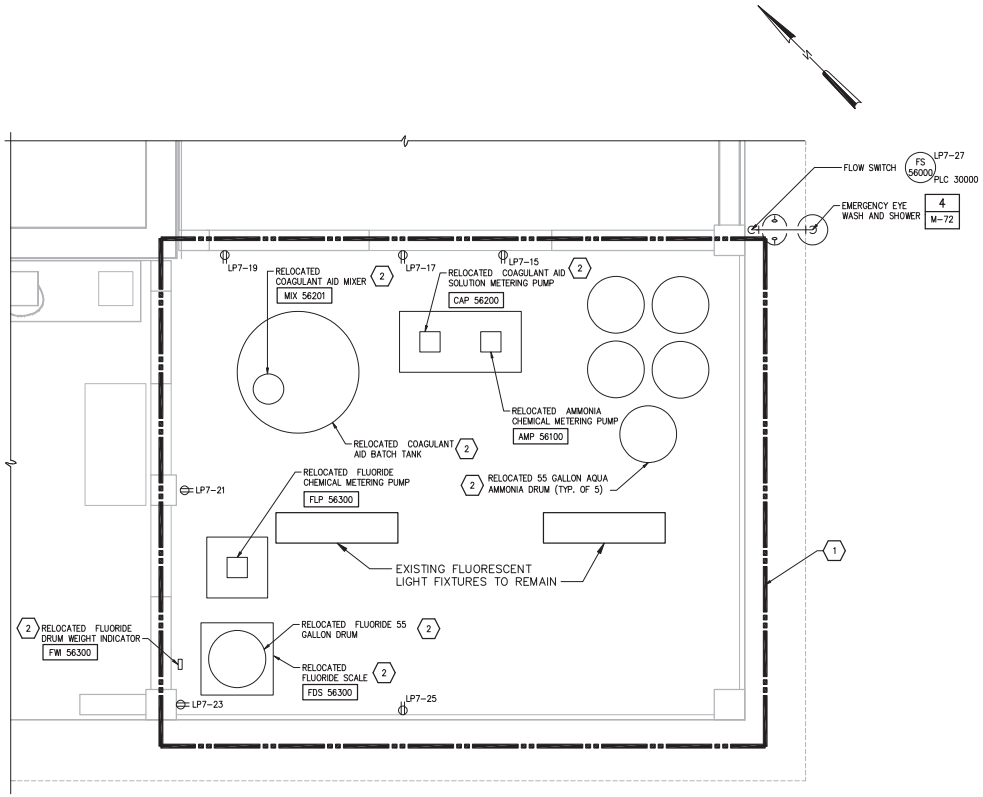

PLAN
1/2" = 1'-0"

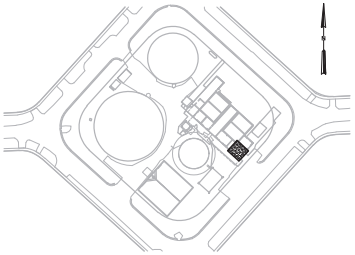

LOCATION MAP

KEYED NOTES:

1. AFTER DEMOLITION OF THE HYPOCHLORITE SYSTEM THIS AREA SHALL BE USED FOR THE INTERIM CHEMICAL FEED SYSTEMS AS SPECIFIED IN THE SECTION ENTITLED "INTERIM CHEMICAL FEED FACILITY" AND AS SHOWN ON THIS DRAWING.
2. RELOCATE CHEMICAL STORAGE DRUMS, TANKS, PUMPS AND ACCESSORIES FROM THEIR CURRENT LOCATION TO THIS PROPOSED LOCATION PER THE REQUIREMENTS IN THE SECTION TILED "INTERIM CHEMICAL FEED FACILITY".

LEGEND:

PHOTO # – ARROW INDICATES DIRECTION AND POINT OF VIEW OF PHOTO

PROPOSED

TO BE REMOVED

1/2"=1'-0" 12" 0 1 3'

NO.	DATE	ISSUED FOR	BY
1	4-1-14	100% QA COMMENTS	H.J.V.

DESIGNED J.M.B.
DRAWN G.P.B.
CHECKED J.C.B.
PROJ. ENGR. J.C.B.

JOHN C. BURKE P.E.
No. 17301

HAZEN AND SAWYER
Environmental Engineers & Scientists
4000 Hollywood Boulevard, Suite 750N
Hollywood, Florida 33021
Certificate of Authorization Number: 2771

SCALE 1/2"=1'-0"

CLIENTS PROJECT: –
ENGINEERS PROJECT: 44238-004
CAD REFERENCE: 44238-004BP3-E32

NORTH MIAMI FLORIDA
CITY OF NORTH MIAMI
PUBLIC WORKS UTILITIES

WINSON WATER TREATMENT PLANT
BID PACKAGE 3: WTP REHABILITATION
INTERIM CHEMICAL STORAGE AND FEED SYSTEM POWER AND LIGHTING PLAN

DATE: JUNE 2014
SHEET: 271 OF 335
DRAWING: E-32

PERMITTING

PLOT DATE: 6/10/2014 12:27 PM BY: JAS

XREFs= ..\Block\44238-004-BP3-TB,..\Base-BP3\M-BP1-Filters-Plan-Bottom-X,..\Base-BP3\S-BP1-Filters-Plan-Bottom-X,..\Base-BP3\C-Site-Survey-X,..\Base-BP3\M-BP3-Filters-Plan-Bottom

File = H:\44238-004\Drawings\Bid Package 3 - WTP Rehab\Electrical\44238-004BP3-E32 Saved by jbrood Save date = 6/9/2014 9:06 PM

CHEMICAL HANDLING FACILITY LOCAL CONTROL PANEL SCHEDULE		
ID	DESCRIPTION	COMMENTS
PLC 50000	CHEMICAL HANDLING FACILITY PLC	FLOOR/WALL
LCP 53000	COAGULANT AID PACKAGE UNIT CONTROL PANEL	POST MOUNTED
LCP 53100	COAGULANT AID PUMP SKID LOCAL CONTROL PANEL	POST MOUNTED
LCP 55100	ANTI-COAGULANT PUMP SKID LCP	POST MOUNTED
LCP 52000	FLUORIDE UNLOADING LCP	WALL MOUNTED
LCP 52020	FLUORIDE TRANSFER PUMP LCP	POST MOUNTED
LCP 52100	FLUORIDE PUMP SKID LCP	WALL MOUNTED
LCP 54000	AMMONIA UNLOADING LCP	WALL MOUNTED
LCP 54100	AMMONIA PUMP SKID LCP	WALL MOUNTED
LCP 56000	CHEMICAL LEAK DETECTION PANEL	WALL MOUNTED

NOTES:

1. SEE DRAWING M-54 FOR EQUIPMENT LOCATIONS IN SECTION VIEW
2. SEE LP8 PANEL SCHEDULE ON DRAWING E-45 FOR LOCAL CONTROL PANEL CIRCUIT NUMBERS.
3. LIGHT FIXTURES CIRCUIT NUMBERS HAVE A SUFFIX LETTER THAT INDICATES WHICH SWITCH IS ASSOCIATED WITH THAT LIGHT.
4. SEE RISER DIAGRAMS ON DRAWINGS E-49 THRU E-53 FOR A COMPLETE LIST OF SIGNAL CONDUITS AND WIRING.
5. ALL ELECTRICAL DEVICES SHALL BE A MINIMUM 36-INCHES AFF.
6. THERE SHALL NOT BE ANY ELECTRICAL FITTINGS OR CONDUIT JOINTS BELOW THE MAXIMUM ASSOCIATED CONTAINMENT ELEVATIONS.

KEY NOTE:

1. SEE RISER DRAWING FOR DETAILS.

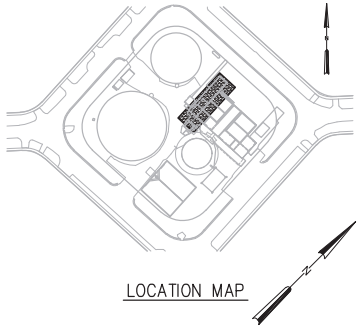

LOCATION MAP

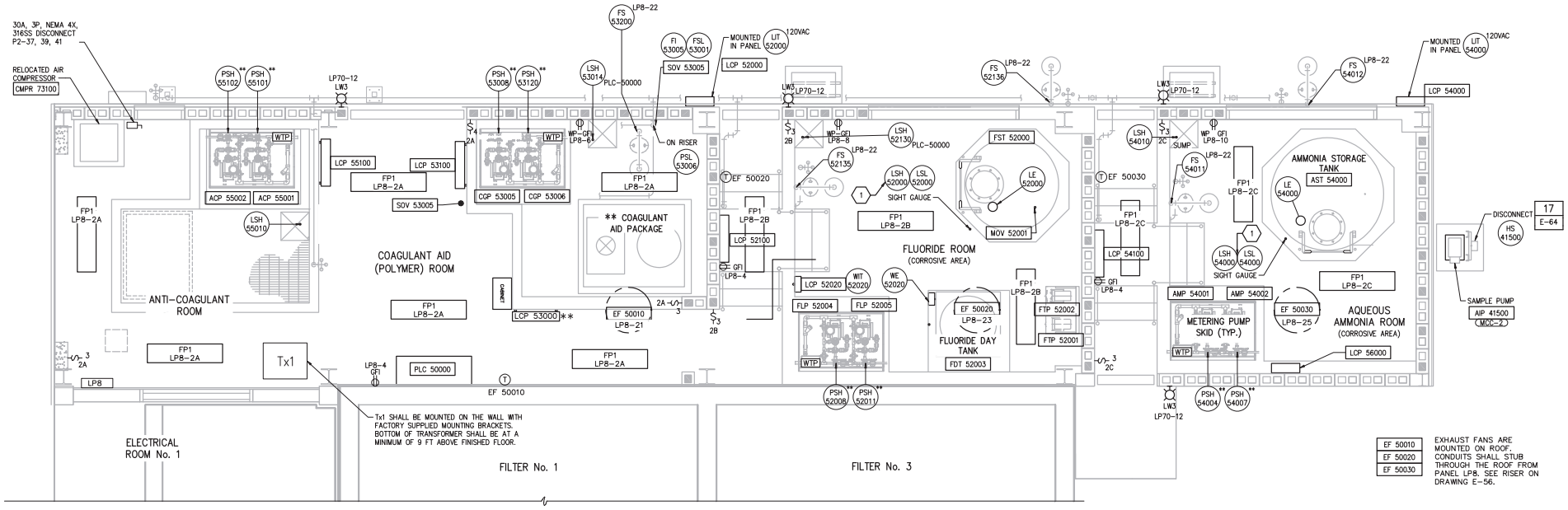

LEGEND

** PROVIDED, INSTALLED AND WIRED BY EQUIPMENT VENDOR

WTP – VENDOR PACKAGE WIRING TERMINATION POINT

CHEMICAL HANDLING FACILITY
PROPOSED PLAN
3/8" = 1'-0"

3/8"=1'-0"

NO.	DATE	ISSUED FOR	BY

DESIGNED J.M.B.
DRAWN G.P.B.
CHECKED J.C.B.
PROJ. ENGR. J.C.B.

JOHN C. BURKE P.E.
No. 17301

HAZEN AND SAWYER
Environmental Engineers & Scientists
4000 Hollywood Boulevard, Suite 750N
Hollywood, Florida 33021
Certificate of Authorization Number: 2771

SCALE 3/8"=1'-0"

CLIENTS PROJECT: –
ENGINEERS PROJECT: 44238-004
CAD REFERENCE: 44238-004BP3-E33

NORTH MIAMI FLORIDA
CITY OF NORTH MIAMI
PUBLIC WORKS UTILITIES

WINSON WATER TREATMENT PLANT
BID PACKAGE 3: WTP REHABILITATION
CHEMICAL HANDLING FACILITY
POWER AND LIGHTING PLAN

DATE: JUNE 2014
SHEET: 272 OF 335
DRAWING: E-33

PERMITTING

XREFs= ..\Tblock\44238-004-BP3-TB,..\Base-BP3\S-BP3-ChemHand-Plan,..\Base-BP3\S-BP1-Filters-Plan-Bottom-X,..\Base-BP3\M-BP3-ChemHand-Plan,..\Base-BP3\H-BP3-ChemHand-Plan

File = H:\44238-004\Drawings\Bid Package 3 - WTP Rehab\Electrical\44238-004BP3-E33 Saved by jbroad Save date = 6/9/2014 5:53 PM

PLOT DATE: 6/10/2014 12:28 PM BY: HS

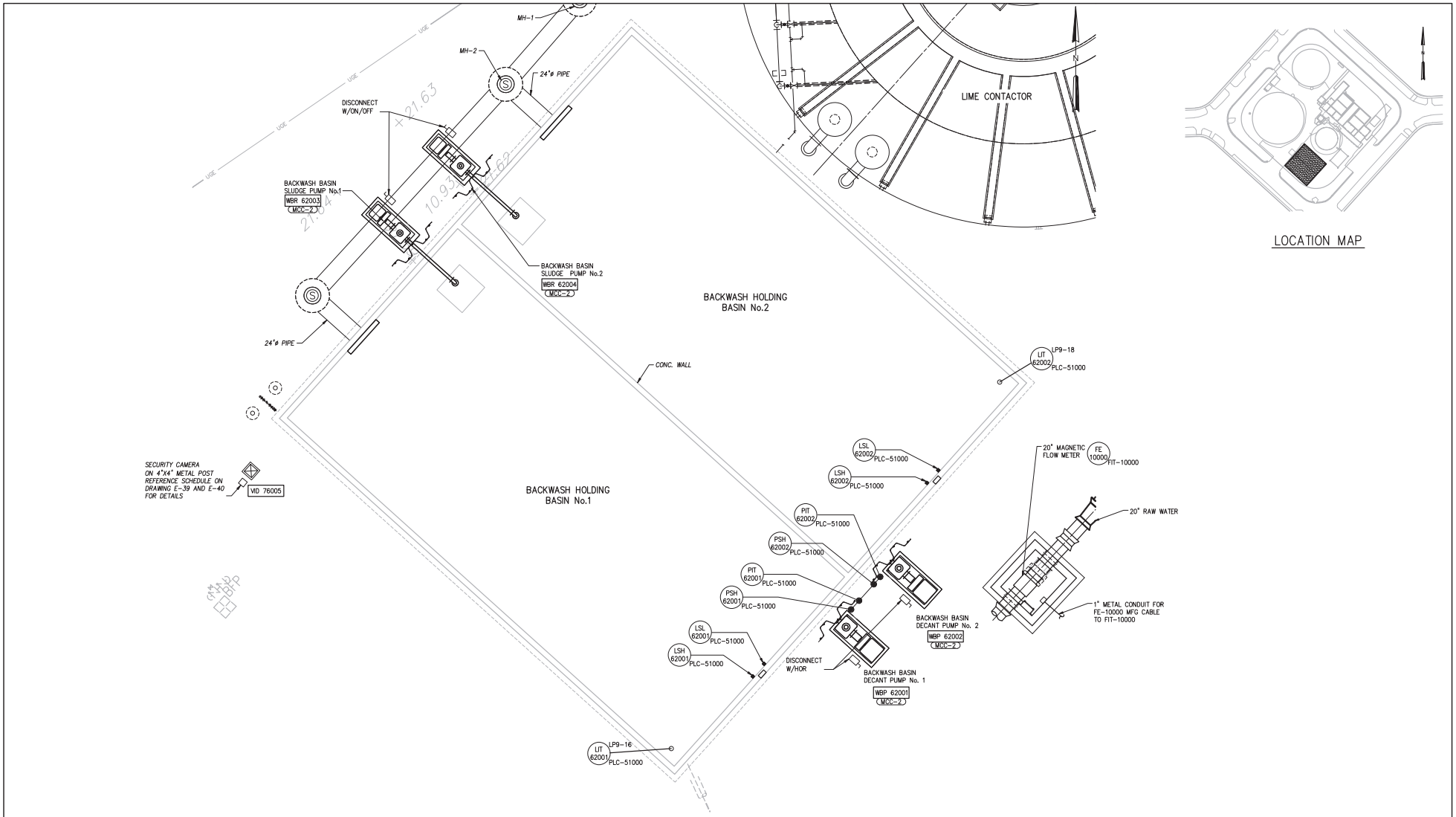

PLAN PROPOSED
3/16" = 1'-0"

NO.	DATE	ISSUED FOR	BY

DESIGNED J.M.B.
DRAWN J.M.B.
CHECKED J.C.B.
PROJ. ENGR. J.C.B.

JOHN C. BURKE P.E.
No. 17301

HAZEN AND SAWYER
Environmental Engineers & Scientists
4000 Hollywood Boulevard, Suite 750N
Hollywood, Florida 33021
Certificate of Authorization Number: 2771

SCALE 3/16"=1'-0"

CLIENTS PROJECT: –
ENGINEERS PROJECT: 44238-004
CAD REFERENCE: 44238-004BP3-E34

NORTH MIAMI FLORIDA
CITY OF NORTH MIAMI
PUBLIC WORKS UTILITIES

WINSON WATER TREATMENT PLANT
BID PACKAGE 3: WTP REHABILITATION
BACKWASH HOLDING BASINS
POWER PLAN

DATE: JUNE 2014
SHEET: 273 OF 335
DRAWING: E-34

PERMITTING

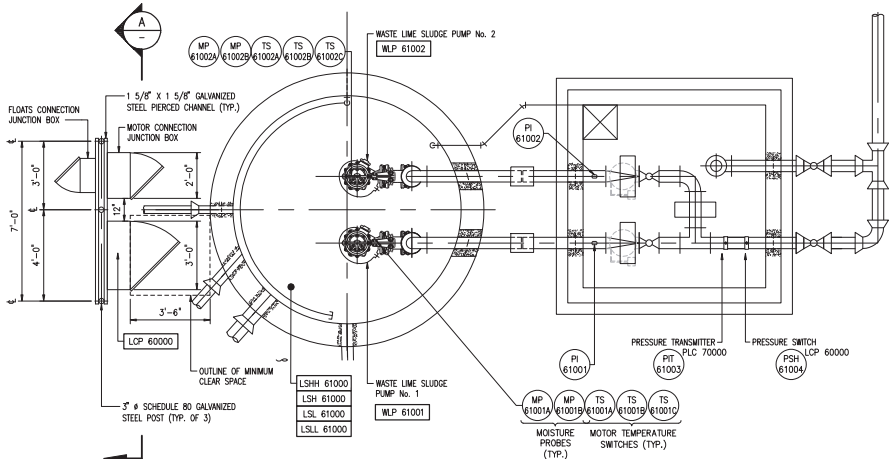

BOTTOM PLAN
3/8" = 1'-0"

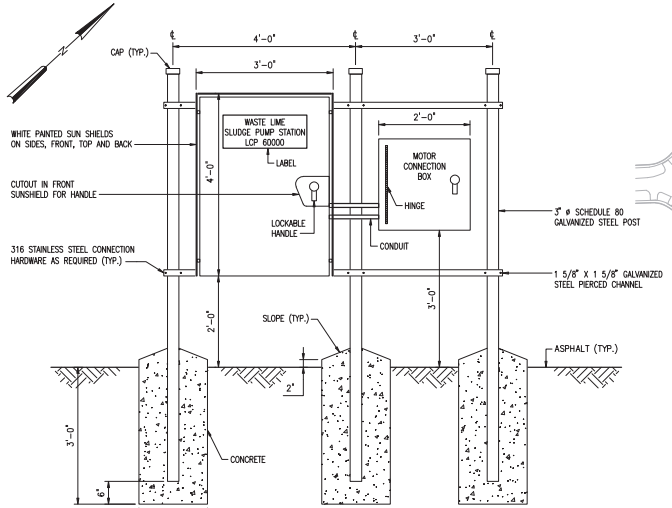

FRONT ELEVATION VIEW
SECTION A
3/4" = 1'-0"

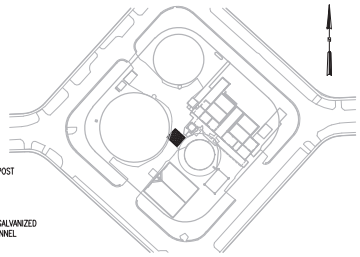

LOCATION MAP

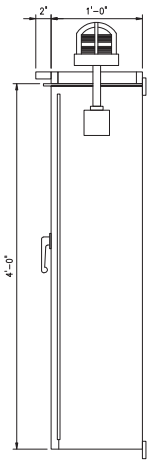

SIDE VIEW

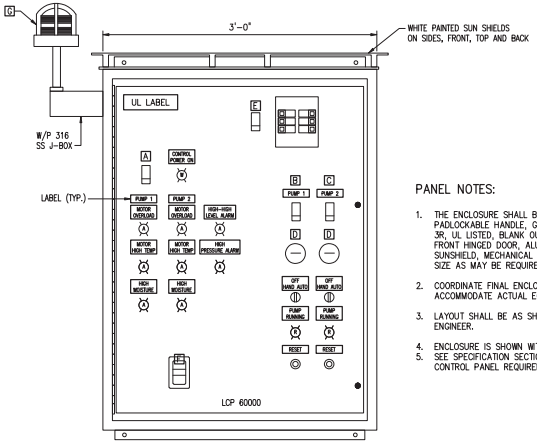

FRONT VIEW OUTER DOOR NOT SHOWN

PANEL NOTES:

1. THE ENCLOSURE SHALL BE 316 SS, 3PT PADLOCKABLE HANDLE, GASKETED, MODIFIED NEMA 3R, UL LISTED, BLANK OUTER DOOR, ALUMINUM DEAD FRONT HINGED DOOR, ALUMINUM SUBPLATE, SUNSHIELD, MECHANICAL INTERLOCK. INCREASE PANEL SIZE AS MAY BE REQUIRED.
2. COORDINATE FINAL ENCLOSURE SIZE TO ACCOMMODATE ACTUAL EQUIPMENT.
3. LAYOUT SHALL BE AS SHOWN AND APPROVED BY ENGINEER.
4. ENCLOSURE IS SHOWN WITH OUTER DOOR REMOVED.
5. SEE SPECIFICATION SECTION 11210 FOR ADDITIONAL CONTROL PANEL REQUIREMENTS.

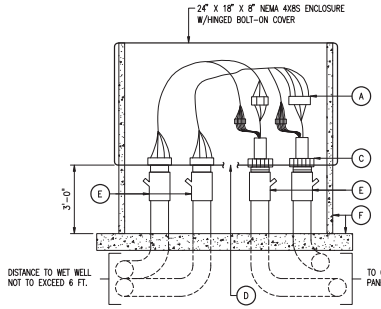

PUMPS MOTOR CONNECTION BOX
NTS

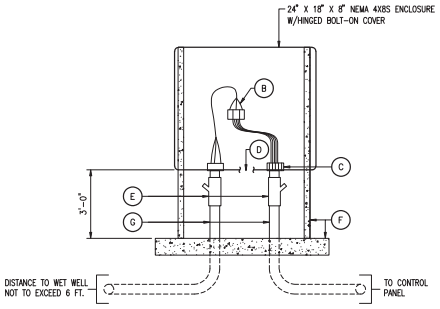

FLOATS CONNECTION BOX
NTS

LEGEND:

- A MAIN POWER CIRCUIT BREAKER
- B PUMP NO.1 CIRCUIT BREAKER
- C PUMP NO.2 CIRCUIT BREAKER
- D RUNNING TIME METERS (2)
- E L.P. MAIN CIRCUIT BREAKER
- F GFI DUPLEX RECEPTACLE
- G W/P TOP MTD. HIGH-HIGH LEVEL ALARM LIGHT

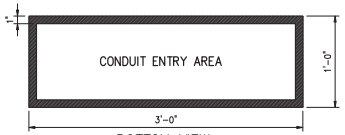

BOTTOM VIEW

CONTROL PANEL LAYOUT
NTS

- A C-POLE POWER INSULATED TERM BLOCK PANEL MOUNT ALLEN BRADLEY BULLETIN 1492 SIZED AS REQUIRED (ONE PER PUMP).
- B C-FLOAT CIRCUITS CONTROL INSULATED TERM BLOCK PANEL MOUNT ALLEN BRADLEY BULLETIN 1492.
- C GLAND NUT AND NEOPRENE BUSHING EQUAL TO CROUSE HINDS CGK SIZE AS REQUIRED FOR CABLE O.D.
- D FIELD PUNCH (1/2") DRAIN HOLES.
- E CONDUIT SEAL.
- F CONTROL PANEL FOUNDATION.
- G HIGH/LOW LEVEL FLOATS.

GENERAL NOTES:

1. CONTRACTOR SHALL PROVIDE AND INSTALL CONDUIT SEAL OFF FITTINGS ON ALL CONDUIT LEAVING THE WET WELL.
2. CONTROL PANEL SHALL HAVE A UL 508A LABEL.
3. PROVIDE ARC FLASH LABELS PER NEC

3/4"=1'-0" 6" 0 1 2'
3/8"=1'-0" 12" 0 1 2 4'

NO.	DATE	ISSUED FOR	BY

DESIGNED J.M.B.
DRAWN G.P.B.
CHECKED J.C.B.
PROJ. ENGR. J.C.B.

JOHN C. BURKE P.E.
No. 17301

HAZEN AND SAWYER
Environmental Engineers & Scientists
4000 Hollywood Boulevard, Suite 750N
Hollywood, Florida 33021
Certificate of Authorization Number: 2771

SCALE: AS NOTED

CLIENTS PROJECT: –
ENGINEERS PROJECT: 44238-004
CAD REFERENCE: 44238-004BP3-E35

NORTH MIAMI FLORIDA
CITY OF NORTH MIAMI
PUBLIC WORKS UTILITIES

WINSON WATER TREATMENT PLANT
BID PACKAGE 3: WTP REHABILITATION
WASTE LIME SLUDGE PUMP STATION POWER PLAN

DATE: JUNE 2014
SHEET: 274 OF 335
DRAWING: E-35

PERMITTING

PLOT DATE: 6/10/2014 12:32 PM BY: NS

XREFs= ..\Tblock\44238-004-BP3-TB,..\Base-BP3\M-BP3-SludgePS-Plan,..\Base-BP3\S-BP3-SludgePS-Plan

File = H:\44238-004\Drawings\Bid Package 3 - WTP Rehab\Electrical\44238-004BP3-E35 Saved by randersen Save date = 6/9/2014 8:28 PM

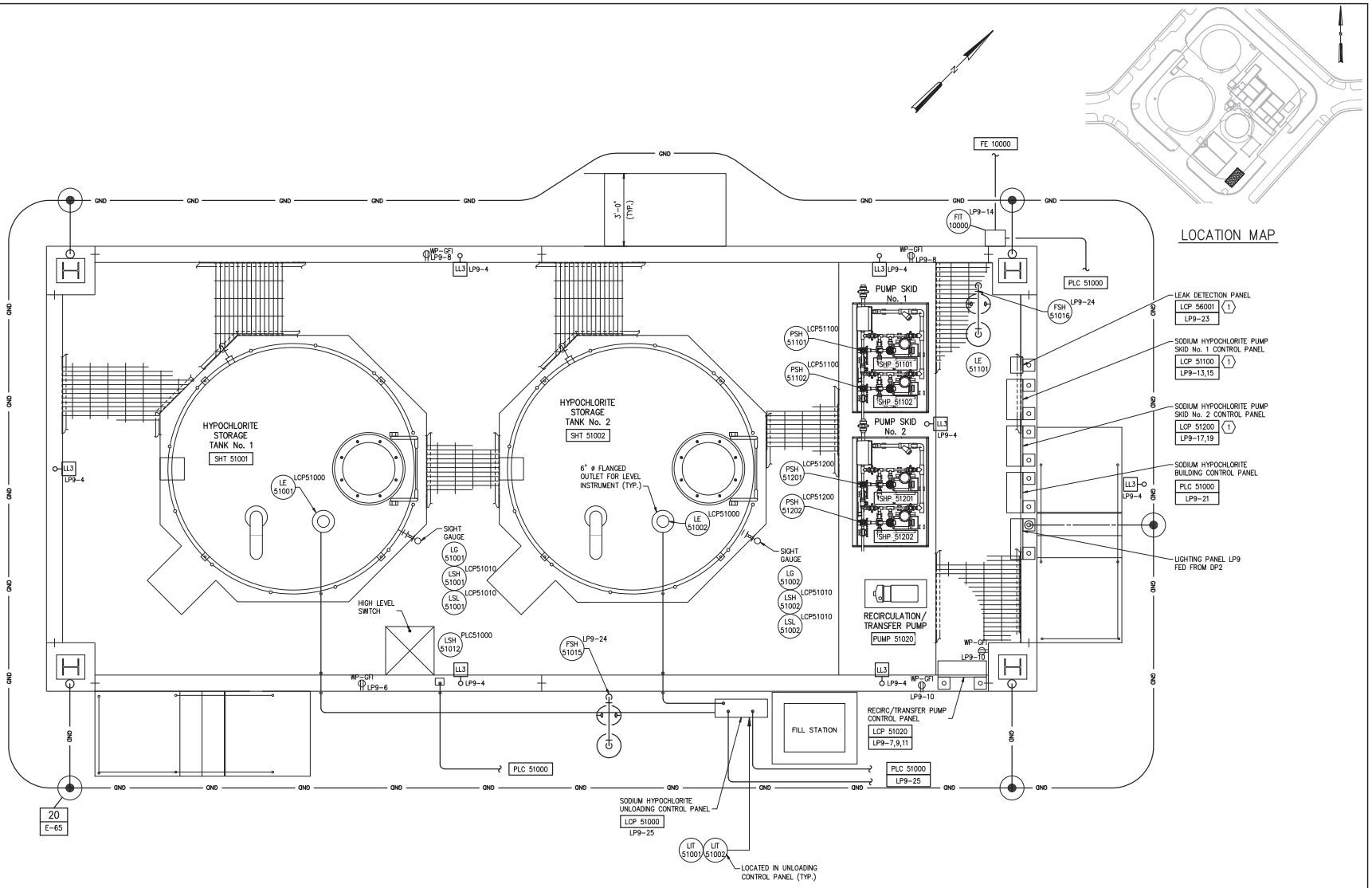

KEYED NOTES:

1. LOCAL CONTROL PANEL SHALL BE DESIGNED AND PROVIDED BY THE ASSOCIATED EQUIPMENT VENDOR.

NO.	DATE	ISSUED FOR	BY
1	4-1-14	100% QA COMMENTS	H.J.V.

DESIGNED J.M.B.
DRAWN G.P.B.
CHECKED J.C.B.
PROJ. ENGR. J.C.B.

JOHN C. BURKE P.E.
No. 17301

HAZEN AND SAWYER
Environmental Engineers & Scientists
4000 Hollywood Boulevard, Suite 750N
Hollywood, Florida 33021
Certificate of Authorization Number: 2771

SCALE 1/2"=1'-0"

CLIENTS PROJECT: –
ENGINEERS PROJECT: 44238-004
CAD REFERENCE: 44238-004BP3-E36

NORTH MIAMI FLORIDA
CITY OF NORTH MIAMI
PUBLIC WORKS UTILITIES

WINSON WATER TREATMENT PLANT
BID PACKAGE 3: WTP REHABILITATION
SODIUM HYPOCHLORITE FACILITIES POWER AND LIGHTING

DATE: JUNE 2014
SHEET: 275 OF 335
DRAWING: E-36

PERMITTING

PLOT DATE: 6/10/2014 12:34 PM BY: JKS

XREFs= ..\Tblock\44238-004-BP3-TB,..\Base-BP3\S-BP3-Hypochlorite-Plan,..\Base-BP3\M-BP3-Hypochlorite-Plan

File = H:\44238-004\Drawings\Bid Package 3 - WTP Rehab\Electrical\44238-004BP3-E36 Saved by jbrood Save date = 6/9/2014 7:24 PM

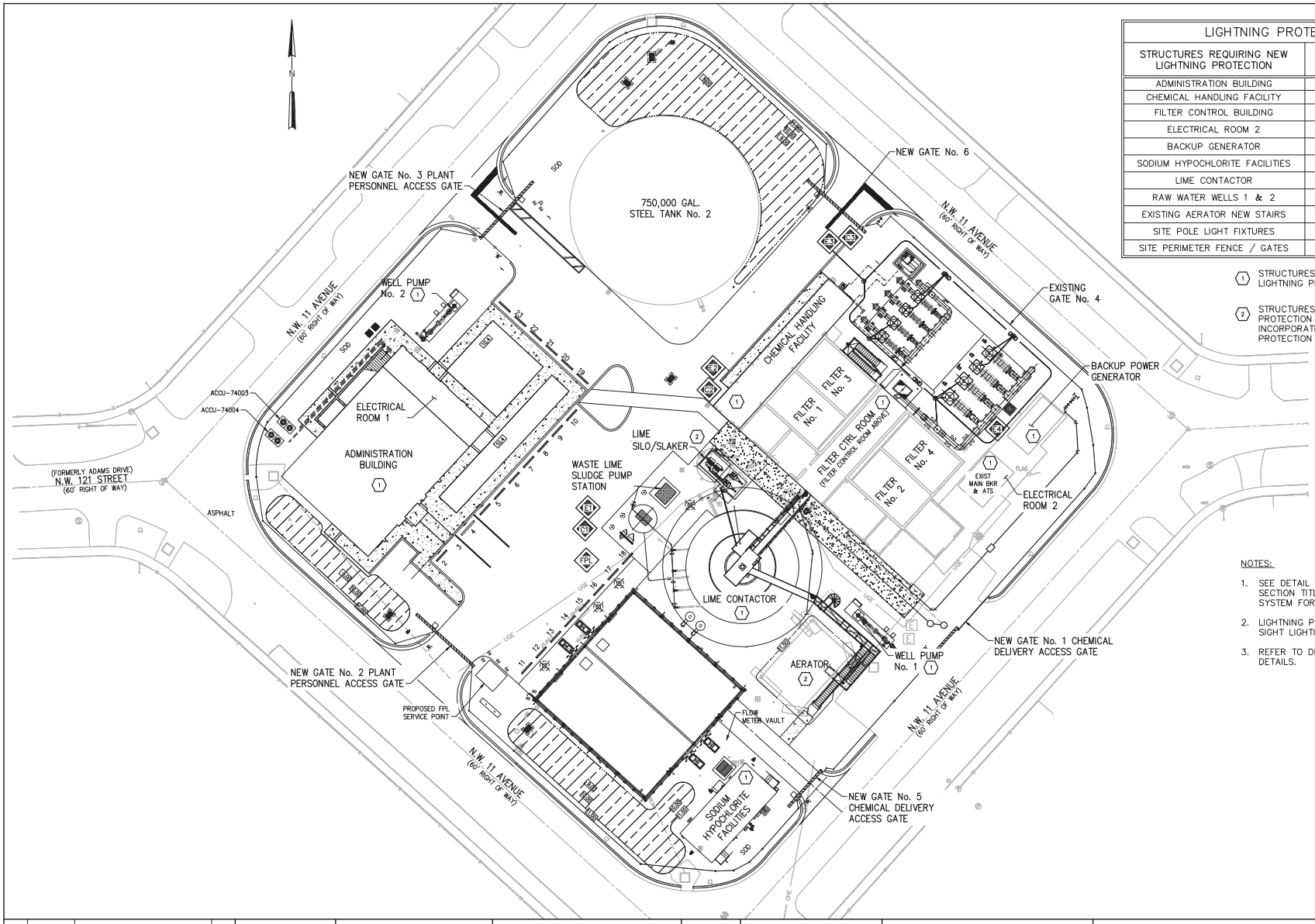

LIGHTNING PROTECTION SYSTEM	
STRUCTURES REQUIRING NEW LIGHTNING PROTECTION	EXISTING LIGHTNING PROTECTION EQUIPMENT TO BE INTEGRATED WITH THE NEW SYSTEM
ADMINISTRATION BUILDING	AERATOR
CHEMICAL HANDLING FACILITY	LIME SILO
FILTER CONTROL BUILDING	
ELECTRICAL ROOM 2	
BACKUP GENERATOR	
SODIUM HYPOCHLORITE FACILITIES	
LIME CONTACTOR	
RAW WATER WELLS 1 & 2	
EXISTING AERATOR NEW STAIRS	
SITE POLE LIGHT FIXTURES	
SITE PERIMETER FENCE / GATES	

(1) STRUCTURES OR AREAS PROPOSED FOR LIGHTNING PROTECTION COVERAGE

(2) STRUCTURES OR AREAS WITH EXISTING LIGHTNING PROTECTION COVERAGE. THESE AREAS SHALL BE INCORPORATED INTO THE OVERALL LIGHTNING PROTECTION SYSTEM.

NOTES:

1. SEE DETAIL DRAWINGS AND SPECIFICATION SECTION TITLED LIGHTNING PROTECTION SYSTEM FOR MORE DETAILS.
2. LIGHTNING PROTECTION SHALL INCLUDE ALL SIGHT LIGHTING POLES.
3. REFER TO DRAWING E-65 FOR MORE DETAILS.

LEGEND:

EXISTING

PROPOSED

1"=20'-0" 20 10 0 20'

NO.	DATE	ISSUED FOR	BY
1	4-1-14	100% QA COMMENTS	H.J.V.

DESIGNED J.M.B.
DRAWN G.P.B.
CHECKED J.C.B.
PROJ. ENGR. J.C.B.

JOHN C. BURKE P.E. No. 17301

HAZEN AND SAWYER
Environmental Engineers & Scientists
4000 Hollywood Boulevard, Suite 750N
Hollywood, Florida 33021
Certificate of Authorization Number: 2771

SCALE 1"=20'-0"

CLIENTS PROJECT: –
ENGINEERS PROJECT: 44238-004
CAD REFERENCE: 44238-004BP3-E37

NORTH MIAMI FLORIDA
CITY OF NORTH MIAMI
PUBLIC WORKS UTILITIES

WINSON WATER TREATMENT PLANT
BID PACKAGE 3: WTP REHABILITATION
LIGHTNING PROTECTION SYSTEM

DATE: JUNE 2014
SHEET: 276 OF 335
DRAWING: E-37

PERMITTING

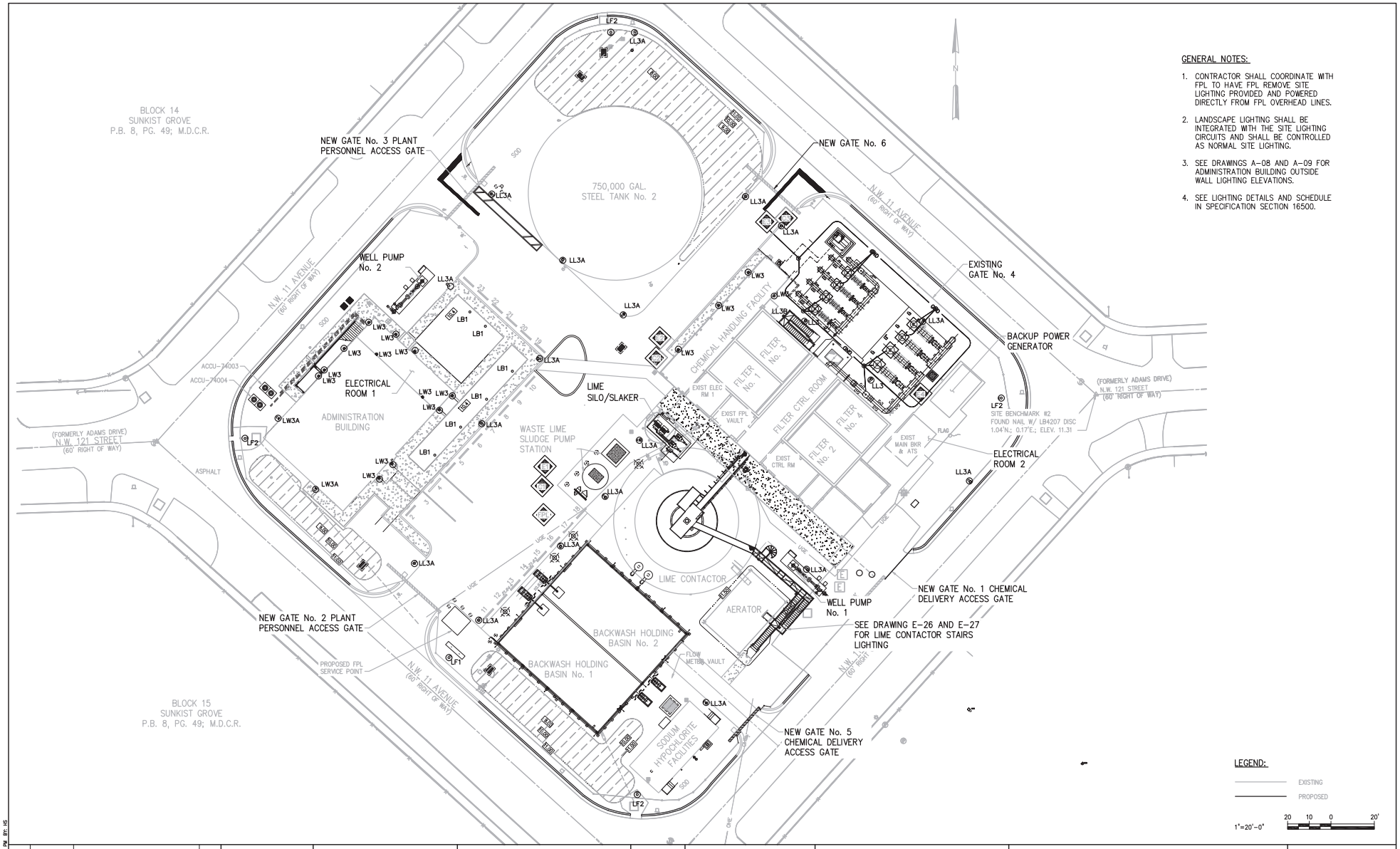

GENERAL NOTES:

1. CONTRACTOR SHALL COORDINATE WITH FPL TO HAVE FPL REMOVE SITE LIGHTING PROVIDED AND POWERED DIRECTLY FROM FPL OVERHEAD LINES.
2. LANDSCAPE LIGHTING SHALL BE INTEGRATED WITH THE SITE LIGHTING CIRCUITS AND SHALL BE CONTROLLED AS NORMAL SITE LIGHTING.
3. SEE DRAWINGS A-08 AND A-09 FOR ADMINISTRATION BUILDING OUTSIDE WALL LIGHTING ELEVATIONS.
4. SEE LIGHTING DETAILS AND SCHEDULE IN SPECIFICATION SECTION 16500.

LEGEND:

EXISTING
PROPOSED

1"=20'-0" 20 10 0 20'

NO.	DATE	ISSUED FOR	BY

DESIGNED J.M.B.
DRAWN G.P.B.
CHECKED J.C.B.
PROJ. ENGR. J.C.B.

JOHN C. BURKE P.E.
No. 17301

HAZEN AND SAWYER
Environmental Engineers & Scientists
4000 Hollywood Boulevard, Suite 750N
Hollywood, Florida 33021
Certificate of Authorization Number: 2771

SCALE 1"=20'-0"

CLIENTS PROJECT: –
ENGINEERS PROJECT: 44238-004
CAD REFERENCE: 44238-004BP3-E38

NORTH MIAMI FLORIDA
CITY OF NORTH MIAMI
PUBLIC WORKS UTILITIES

WINSON WATER TREATMENT PLANT
BID PACKAGE 3: WTP REHABILITATION
SITE LIGHTING PLAN

DATE: JUNE 2014
SHEET: 277 OF 335
DRAWING: E-38

PERMITTING

PLOT DATE: 6/10/2014 12:37 PM BY: JKS

File = H:\44238-004\Drawings\Bid Package 3 - WTP Rehab\Electrical\44238-004BP3-E38 Saved by jbrood Save date = 6/9/2014 5:45 PM

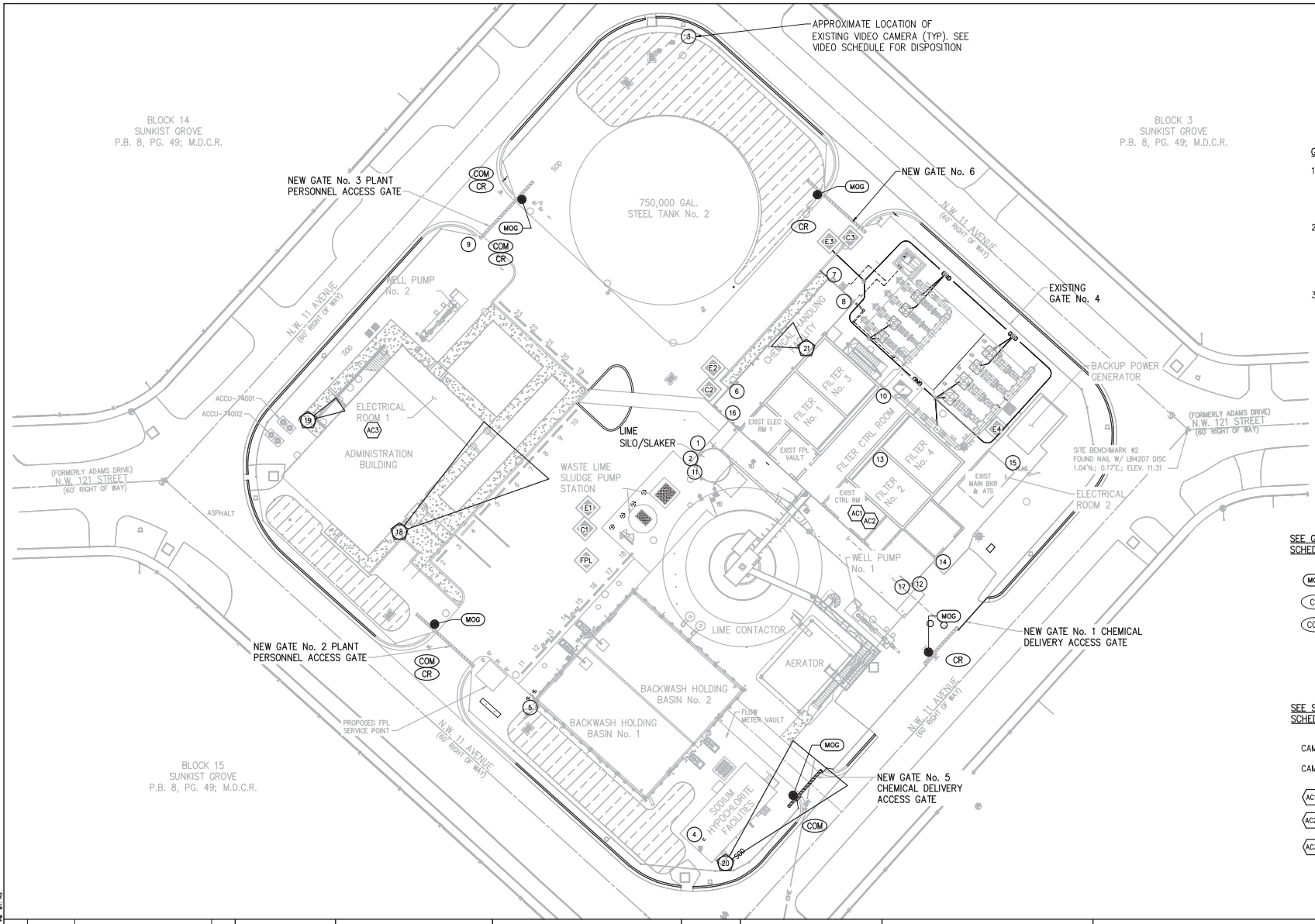

GENERAL NOTES:

1. THIS DRAWING SHOWS THE APPROXIMATE LOCATIONS OF GATE ACCESS EQUIPMENT. SEE CIVIL DRAWING FOR DETAILED LOCATION OF GATE ACCESS EQUIPMENT.
2. CONTRACTOR SHALL FURNISH AND INSTALL ALL CONDUIT AND CABLES REQUIRED FOR THE ELECTRONIC ACCESS CONTROL AND ALARM MONITORING (EACAM) SYSTEM SPECIFIED IN SECTION 16700.
3. (EACAM) SYSTEM VENDOR SHALL TERMINATE ALL ELECTRONIC ACCESS CONTROL AND ALARM MONITORING SYSTEM CABLES AT ALL EQUIPMENT.

SEE GATE ACCESS EQUIPMENT SCHEDULE DWG. E-40

- MOG — MOTOR OPERATED GATE
- CR — CARD READER
- COM — INTERCOM

SEE SECURITY CAMERA EQUIPMENT SCHEDULE DWG. E-40

CAMERA 1 THROUGH 17 ARE EXISTING

CAMERA 18 THROUGH 21 ARE PROPOSED

- AC1 — EXISTING ACCESS CONTROL EQUIPMENT
- AC2 — NEW ACCESS CONTROL EQUIPMENT IN EXISTING FILTER BUILDING
- AC3 — NEW ACCESS CONTROL EQUIPMENT IN NEW ADMINISTRATION BUILDING

1"=20'-0" 20 10 0 20'

NO.	DATE	ISSUED FOR	BY

DESIGNED J.M.B.
DRAWN G.P.B.
CHECKED J.C.B.
PROJ. ENGR. J.C.B.

JOHN C. BURKE P.E.
No. 17301

HAZEN AND SAWYER
Environmental Engineers & Scientists
4000 Hollywood Boulevard, Suite 750N
Hollywood, Florida 33021
Certificate of Authorization Number: 2771

SCALE 1"=20'-0"

CLIENTS PROJECT: –
ENGINEERS PROJECT: 44238-004
CAD REFERENCE: 44238-004BP3-E39

NORTH MIAMI FLORIDA
CITY OF NORTH MIAMI
PUBLIC WORKS UTILITIES

WINSON WATER TREATMENT PLANT
BID PACKAGE 3: WTP REHABILITATION
SITE SECURITY PLAN

DATE: JUNE 2014
SHEET: 278 OF 335
DRAWING: E-39

PERMITTING

PLOT DATE: 6/10/2014 12:40 PM BY: NS

File = H:\44238-004\Drawings\Bid Package 3 - WTP Rehab\Electrical\44238-004BP3-E39 Saved by randersen Save date = 6/9/2014 6:35 PM

SECURITY CAMERA SCHEDULE

MARK	CAMERA ID	LOCATION	STATUS	EQUIP NOTES	CONDUIT NOTES	CONDUIT TERMINATION
1	VID 76001	LIME SILO (VIEW OF GATE NO.3)	EXISTING	2	C	FILTERS LOWER FLOOR CTRL RM
2	VID 76002	LIME SILO (MOUNTED AT TOP OF SILO) (PTZ)	EXISTING	1	C	FILTERS LOWER FLOOR CTRL RM
3	VID 76003	4"X4" METAL POST MOUNTED AT N. CORNER OF WTP (VIEW SW) (PTZ)	EXISTING	3	A	ADMIN BLDG CONTROL ROOM
4	VID 76004	4"X4" METAL POST MOUNTED AT S. CORNER OF WTP (VIEW NW) (PTZ)	EXISTING	4	B	FILTERS LOWER FLOOR CTRL RM
5	VID 76005	4"X4" METAL POST MOUNTED AT S. CORNER OF GATE NO.2 (VIEW OF ENTRANCE)	EXISTING	3	A	ADMIN BLDG CONTROL ROOM
6	VID 76006	WALL MOUNTED ON WEST FACE OF CHEM. (AMMONIA) HANDLING FACILITY	EXISTING	2	C	FILTERS LOWER FLOOR CTRL RM
7	VID 76007	WALL MOUNTED ON N. CORNER OF CHEM. FACILITY (VIEW OF HSPS)	EXISTING	2	C	FILTERS LOWER FLOOR CTRL RM
8	VID 76008	WALL MOUNTED WITHIN CHEM. FACILITY (INTERIOR VIEW SOUTH)	EXISTING	2	B	FILTERS LOWER FLOOR CTRL RM
9	VID 76009	4"X4" METAL POST MOUNTED AT S. CORNER OF GATE NO.3 (VIEW OF ENTRANCE)	EXISTING	3	A	ADMIN BLDG CONTROL ROOM
10	VID 76010	EAST FACE OF FILTER NO.3 (VIEW OF DIESEL GENERATOR)	EXISTING	1	C	FILTERS LOWER FLOOR CTRL RM
11	VID 76011	LIME SILO (VIEW OF GATE NO.2)	EXISTING	2	C	FILTERS LOWER FLOOR CTRL RM
12	VID 76012	S.CORNER OF FILTER BLDG (VIEW OF HYPOCHLORITE FACILITIES)	EXISTING	2	C	FILTERS LOWER FLOOR CTRL RM
13	VID 76013	FILTER CONTROL ROOM STAIRWELL DOOR (VIEW OF DOOR)	EXISTING	1	C	FILTERS LOWER FLOOR CTRL RM
14	VID 76014	EAST FACE OF FILTER BLDG (VIEW OF GATE NO.1)	EXISTING	2	C	FILTERS LOWER FLOOR CTRL RM
15	VID 76015	E. FACE OF ELEC. RM 2 (VIEW EAST OF ELEC. RM.2)	EXISTING	2	C	FILTERS LOWER FLOOR CTRL RM
16	VID 76016	S. END OF CHEM. FACILITY (COAGULANT AND ANIT-COAGULANT AREA)	EXISTING	2	B	FILTERS LOWER FLOOR CTRL RM
17	VID 76017	S. CORNER OF FILTER BLDG (VIEW OF FILTER BLDG. BREEZE WAY)	EXISTING	1	C	FILTERS LOWER FLOOR CTRL RM
18	VID 76018	NEW ADMINISTRATION BUILDING VIEW OF FIRST FLOOR FRONT ENTRANCE	PROPOSED	5	A	ADMIN BLDG CONTROL ROOM
19	VID 76019	NEW ADMINISTRATION BUILDING VIEW OF FIRST FLOOR BACK ENTRANCE	PROPOSED	5	A	ADMIN BLDG CONTROL ROOM
20	VID 76020	VIEW OF HYPOCHLORITE BUILDING FILLING STATION FROM HYPOCHLORITE FACILITY WALL	PROPOSED	5	B	FILTERS LOWER FLOOR CTRL RM
21	VID 76021	CENTER (FLUORIDE) OF CHEM. FACILITY (INTERIOR VIEW)	PROPOSED	5	B	FILTERS LOWER FLOOR CTRL RM

GATE SECURITY EQUIPMENT SCHEDULE

GATE NO.	ENTRY PEDESTAL	EXIT PEDESTAL	DESCRIPTION	POWER SOURCE	CONTROL WIRING TO
GATE 1	MOG 77100		MOTOR OPERATED GATE NO. 1	LP9-15	
	CR 77100A	CR 77100B	CARD READER		FILTERS LOWER FLOOR CTRL RM SECURITY ACCESS PANELS
GATE 2	MOG 77200		MOTOR OPERATED GATE NO. 2	LP70-23	
	CR 77200	NA	CARD READER		ADMIN BLDG SECURITY ACCESS PANELS
	COM 77200	NA	INTERCOM		
GATE 3	MOG 77300		MOTOR OPERATED GATE NO. 3	LP70-25	
	CR 77300A	CR 77300B	CARD READER		ADMIN BLDG SECURITY ACCESS PANELS
	COM 77300A	COM 77300B	INTERCOM		
GATE 5	MOG 77500		MOTOR OPERATED GATE NO. 5	LP9-17	
	COM 77500	NA	INTERCOM		FILTERS LOWER FLOOR CTRL RM SECURITY ACCESS PANELS
GATE 6	MOG 77600		MOTOR OPERATED GATE NO. 6	LP70-27	
	NA	CR 77600	CARD READER		ADMIN BLDG SECURITY ACCESS PANELS

VIDEO CAMERA EQUIPMENT CONSTRUCTION NOTES:

1. CONSTRUCTION SHOULD NOT IMPACT THIS CAMERA, CONDUIT OR WIRING
2. CONSTRUCTION MAY IMPACT CURRENT CAMERA, CONDUIT, WIRING OR POLE. THIS WILL REQUIRE THE CONTRACTOR TO DISCONNECT CAMERA AND STORE IN A PROTECTED AREA. CONTRACTOR SHALL PROTECT CONDUIT, WIRING AND POLE DURING CONSTRUCTION AND THEN REINSTALL CAMERA TO SAME POLE WHEN CONSTRUCTION IN AREA IS COMPLETE.
3. RELOCATE EXISTING CAMERA TO A DIFFERENT LOCATION, PROVIDE NEW CONDUIT, WIRING, POLE AND POLE BASE AT NEW LOCATION. WIRING AND CONDUIT SHALL BE NEW BETWEEN CAMERA AND NETWORK EQUIPMENT. THE NEW LOCATION FOR THE EXISTING CAMERA SHALL BE DETERMINED BY THE OWNER DURING CONSTRUCTION TO SUIT FIELD CONDITIONS.
4. DISCONNECT EXISTING CAMERA AND REMOVE POLE. REINSTALL CAMERA ON STRUCTURE TO PROVIDE VIEW OF INTERIOR.
5. NEW CAMERA EQUIPMENT TO BE INSTALLED ON STRUCTURE WALLS

CONDUIT NOTES:

A. NEW CONDUIT TO NEW ADMINISTRATION BUILDING (AC3)
B. NEW CONDUIT TO EXISTING FILTER BUILDING CONTROL ROOM (AC2)(AC3)
C. EXISTING CONDUIT TO EXISTING FILTER BUILDING CONTROL ROOM (AC1)

GENERAL NOTES:

1. SEE SITE SECURITY DRAWING E-39 FOR LOCATIONS
2. CONTRACTOR SHALL PROVIDE AND INSTALL NEW POWER AND CONTROL CONDUITS WITH ASSOCIATED WIRING BETWEEN ALL 5 MOTOR OPERATED SITE ACCESS GATES AND ASSOCIATED POWER AND CONTROL EQUIPMENT AS INDICATED IN THE GATE SECURITY EQUIPMENT SCHEDULE ON THIS DRAWING.

NO.	DATE	ISSUED FOR	BY

DESIGNED J.M.B.
DRAWN H.F.M.
CHECKED J.C.B.
PROJ. ENGR. J.C.B.

JOHN C. BURKE P.E.
No. 17301

HAZEN AND SAWYER
Environmental Engineers & Scientists
4000 Hollywood Boulevard, Suite 750N
Hollywood, Florida 33021
Certificate of Authorization Number: 2771

SCALE NTS

CLIENTS PROJECT: –
ENGINEERS PROJECT: 44238-004
CAD REFERENCE: 44238-004BP3-E40

NORTH MIAMI FLORIDA
CITY OF NORTH MIAMI
PUBLIC WORKS UTILITIES

WINSON WATER TREATMENT PLANT
BID PACKAGE 3: WTP REHABILITATION
SECURITY SCHEDULES

DATE: JUNE 2014
SHEET: 279 OF 335
DRAWING: E-40

PERMITTING

PLOT DATE: 6/10/2014 12:42 PM BY: HS
XREFs= ..\block\44238-004-BP3-TB
File = H:\44238-004\Drawings\Bid Package 3 - WTP Rehab\Electrical\44238-004BP3-E40 Saved by jbroad Save date = 6/9/2014 9:16 PM

PANEL LP70 — ADMINISTRATION BUILDING MAIN ELECTRIC ROOM — MAIN LUGS

225A,208Y/120V,3PH,4W

NO.	USE	VA LOAD A	VA LOAD B	VA LOAD C	WIRE/CONDUIT QTY SIZE	C.B. TRIP	C.B. P		C.B. P	C.B. TRIP	WIRE/CONDUIT QTY SIZE	VA LOAD A	VA LOAD B	VA LOAD C	USE	NO.
1	R112 RECP	180			2#12,1#12G,3/4C	20	1		1	20	2#12,1#12G,3/4C	180			R112 LTG	2
3	R112 RECP		180		2#12,1#12G,3/4C	20	1		1	20	2#12,1#12G,3/4C		180		R104,111	4
5	R112 RECP TELE			360	2#12,1#12G,3/4C	20	1		1	20	2#12,1#12G,3/4C			180	LIGHTING CONTROLLER	6
7	OUTSIDE RECP	720			2#12,1#12G,3/4C	20	1		1	30	3#10,1#12G,3/4C	900			SITE LIGHTING	8
9	OUTSIDE RECP		200		2#12,1#12G,3/4C	20	1		1	30	3#10,1#12G,3/4C		1400		SITE LIGHTING	10
11	OUTSIDE A/C RECP			360	2#12,1#12G,3/4C	20	1		1	30	3#10,1#12G,3/4C			1400	SITE LIGHTING	12
13	FIRE ALARM PANEL	180			2#12,1#12G,3/4C	20	1		1	20	2#12,1#12G,3/4C	180			FIT 11002	14
15	PLC-70000		1600		2#12,1#12G,3/4C	20	1		1	20	2#12,1#12G,3/4C		180		LIT 11002	16
17	R105 RECP			180	2#12,1#12G,3/4C	20	1		1	20	2#12,1#12G,3/4C			180	SHUNT TRIP BK GLASS	18
19	R113 ELEV	180			2#12,1#12G,3/4C	20	1		1	20	2#12,1#12G,3/4C	1800			IRRIGATION CONTROLS	20
21	R113 ELEV SP ESP-75100 1/2HP		1200		2#12,1#12G,3/4C	20	1		1	20			180		SPARE	22
23	MOG 77200			1400	2#12,1#12G,3/4C	20	1		1	20				180	SPARE	24
25	MOG 77300	1400			2#12,1#12G,3/4C	20	2		1	20		180			SPARE	26
27	MOG 77600		1400		2#12,1#12G,3/4C	20			1	20			180		SPARE	28
29	R105 ACCU 74012			4200	2#10,1#10G,3/4C	30	2		1	20				180	SPARE	30
31		4200							1	20		180			SPARE	32
33	R105 AC 74012		5000		2#8,1#10G,3/4C	30	2		1	20			180		SPARE	34
35				5000					1	20				180	SPARE	36
37	R104 PTHP 74013	3000			2#12,1#12G,3/4C	20	2		1	20		180			SPARE	38
39			3000						1	20			180		SPARE	40
41				180		20	1		1	20				180	SPARE	42
		6860	4580	6500								3420	2120	2120		
		0	0	0							TOTAL DEMAND LOAD	10280	6700	8620	25600	

PANEL LP71 — ADMINISTRATION BUILDING FIRST FLOOR — MAIN LUGS

225A,208Y/120V,3PH,4W

NO.	USE	VA LOAD A	VA LOAD B	VA LOAD C	WIRE/CONDUIT QTY SIZE	C.B. TRIP	C.B. P		C.B. P	C.B. TRIP	WIRE/CONDUIT QTY SIZE	VA LOAD A	VA LOAD B	VA LOAD C	USE	NO.
1	EOC OFFICE 108 RECP	1080			2#12,1#12G,3/4C	20	1		1	20	2#12,1#12G,3/4C	180			R109 LTG	2
3	EOC AREA 109 RECP		1080		2#12,1#12G,3/4C	20	1		1	20	2#12,1#12G,3/4C		180		R108,109 LTG	4
5	EOC AREA 109 RECP			900	2#12,1#12G,3/4C	20	1		1	20	2#12,1#12G,3/4C			180	R101, 102 LTG	6
7	EOC AREA 109 RECP	720			2#12,1#12G,3/4C	20	1		1	20	2#12,1#12G,3/4C	900			R102,105,106,107 LTG	8
9	EOC AREA 109 RECP		720		2#12,1#12G,3/4C	20	1		1	20	2#12,1#12G,3/4C		180		R103 LTG	10
11	EOC AREA 109 RECP			720	2#12,1#12G,3/4C	20	1		1	20	2#12,1#12G,3/4C			180	R100 LTG	12
13	EOC AREA 109 RECP	720			2#12,1#12G,3/4C	20	1		1	20	2#12,1#12G,3/4C	180			R108 SECURITY PNL3	14
15	SPARE		180		2#12,1#12G,3/4C	20	1		1	20	2#12,1#12G,3/4C		180		R108 SECURITY PNL4	16
17	SPARE			180	2#12,1#12G,3/4C	20	1		1	20	2#12,1#12G,3/4C			180	R110 FIRE RELAY PNL	18
19	R100, 101, 102 RECP	540			2#12,1#12G,3/4C	20	1		1	20			180		R104,111	20
21	EWC-75301		360		2#12,1#12G,3/4C	20	1		1	20			180		SPARE	22
23	R103, 106, 107 RECP			900	2#12,1#12G,3/4C	20	1		1	20				180	SPARE	24
25	SPARE	180				30	2		1	20			180		SPARE	26
27	SPARE		180						1	20			180		SPARE	28
29	SPARE			180		20	1		1	20				180	SPARE	30
31	SPARE	180				20	1		1	20			180		SPARE	32
33	HWH-76202 6kW		6000		2#8,1#10G,3/4C	40	2		1	20			180		SPARE	34
35				6000					1	20				180	SPARE	36
37	SPARE	180				20	1		1	20			180		SPARE	38
39	LCP-75100		180		2#12,1#12G,3/4C	20	1		1	20			180		SPARE	40
41	SPARE			180		20	1		1	20				180	SPARE	42
		3420	2520	2880								1800	900	900		
		0	0	0							TOTAL DEMAND LOAD	5220	3420	3780	12420	

PANEL LP72A — ADMINISTRATION BUILDING SECOND FLOOR — MAIN LUGS

225A,208Y/120V,3PH,4W

NO.	USE	VA LOAD A	VA LOAD B	VA LOAD C	WIRE/CONDUIT QTY SIZE	C.B. TRIP	C.B. P		C.B. P	C.B. TRIP	WIRE/CONDUIT QTY SIZE	VA LOAD A	VA LOAD B	VA LOAD C	USE	NO.
1	OFFICE R209 RECP	900			2#12,1#12G,3/4C	20	1		1	20	2#12,1#12G,3/4C	720			EF-74003 1/4HP	2
3	OFFICE R208 RECP		720		2#12,1#12G,3/4C	20	1		1	20	2#12,1#12G,3/4C		480		EF-74004 1/8HP	4
5	R204, 205, 206, 207 RECP			720	2#12,1#12G,3/4C	20	1		1	20	2#12,1#12G,3/4C			480	EF-74005 1/8HP	6
7	OFFICE 201 RECP	720			2#12,1#12G,3/4C	20	1		1	20	2#12,1#12G,3/4C	480			EF-74006 1/8HP	8
9	R200 RECP		540		2#12,1#12G,3/4C	20	1		1	20	2#12,1#12G,3/4C		180		ROOF RECEPTACLES	10
11	R200 REFRIG			360	2#12,1#12G,3/4C	20	1		1	20	2#12,1#12G,3/4C			540	OBSERVATION DECK GFI RECP	12
13	R200 MICROWAVE	1200			2#12,1#12G,3/4C	20	1		1	20		180			SPARE	14
15	R200 GFI RECP		360		2#12,1#12G,3/4C	20	1		1	20			180		SPARE	16
17	R200 GFI RECP			180	2#12,1#12G,3/4C	20	1		1	20				180	SPARE	18
19	R200 VENDING RECP	540			2#12,1#12G,3/4C	20	1		1	20		180			SPARE	20
21	R200 VENDING RECP		540		2#12,1#12G,3/4C	20	1		1	20			180		SPARE	22
23	HWH-76201 2.5kW			2500	2#12,1#12G,3/4C	20	2		1	20				180	SPARE	24
25		2500							1	20		180			SPARE	26
27	HWH-76203 6kW		6000		2#8,1#10G,3/4C	40	2		1	20			180		SPARE	28
29				6000					1	20				180	SPARE	30
31	R204 RECP	180			2#12,1#12G,3/4C	20	1		1	20		180			SPARE	32
33	EWC-75302		360		2#12,1#12G,3/4C	20	1		1	20			180		SPARE	34
35	R202,203,210 LTG			1200	2#12,1#12G,3/4C	20	1		1	20				180	SPARE	36
37	R208,209 LTG	1200			2#12,1#12G,3/4C	20	1		1	20		180			SPARE	38
39	R204,205,206,207 LTG		1200		2#12,1#12G,3/4C	20	1		1	20			180		SPARE	40
41	R200,201,210 LTG			1200	2#12,1#12G,3/4C	20	1		1	20				180	SPARE	42
		6040	8160	9760								1920	1200	1560		
		0	0	0							TOTAL DEMAND LOAD	7960	9360	11320	28640	

PANEL LP72B — ADMINISTRATION BUILDING SECOND FLOOR — MAIN LUGS

225A,208Y/120V,3PH,4W

NO.	USE	VA LOAD A	VA LOAD B	VA LOAD C	WIRE/CONDUIT QTY SIZE	C.B. TRIP	C.B. P		C.B. P	C.B. TRIP	WIRE/CONDUIT QTY SIZE	VA LOAD A	VA LOAD B	VA LOAD C	USE	NO.
1	R210 SERVER	720			2#12,1#12G,3/4C	20	1		1	20	2#12,1#12G,3/4C	180			R203 LAB RECP	2
3	R210 SERVER		720		2#12,1#12G,3/4C	20	1		1	20	2#12,1#12G,3/4C		180		R203 LAB RECP	4
5	R210 SERVER			720	2#12,1#12G,3/4C	20	1		1	20	2#12,1#12G,3/4C			180	R203 LAB RECP	6
7	R210 SERVER	720			2#12,1#12G,3/4C	20	1		1	20	2#12,1#12G,3/4C	180			R203 LAB RECP	8
9	R210 SECURITY DESK		180		2#12,1#12G,3/4C	20	1		1	20	2#12,1#12G,3/4C		180		R203 LAB RECP	10
11	R210 OPER CONSOLE			180	2#12,1#12G,3/4C	20	1		1	20	2#12,1#12G,3/4C			180	R203 LAB RECP	12
13	R210 OPER CONSOLE	180			2#12,1#12G,3/4C	20	1		1	20	2#12,1#12G,3/4C	180			R203 LAB RECP	14
15	R210 OPER CONSOLE		180		2#12,1#12G,3/4C	20	1		1	20	2#12,1#12G,3/4C		180		R203 LAB RECP	16
17	R210 OPER CONSOLE			180	2#12,1#12G,3/4C	20	1		1	20	2#12,1#12G,3/4C			180	R203 LAB RECP	18
19	R210 OPER CONSOLE	180			2#12,1#12G,3/4C	20	1		1	20	2#12,1#12G,3/4C	180			R203 LAB RECP	20
21	R210 OPER CONSOLE		180		2#12,1#12G,3/4C	20	1		1	20	2#12,1#12G,3/4C		180		R203 LAB RECP	22
23	R210 OPER CONSOLE			180	2#12,1#12G,3/4C	20	1		1	20	2#12,1#12G,3/4C			180	R203 LAB RECP	24
25	R210 AUX DESK	360			2#12,1#12G,3/4C	20	1		1	20	2#12,1#12G,3/4C	180			R203 FS-76100	26
27	R210 LCP-74100 ACP		360		2#12,1#12G,3/4C	20	1		1	20			180		SPARE	28
29	R210 RECP			360	2#12,1#12G,3/4C	20	1		1	20				180	SPARE	30
31	VOICE PATCH PNL	180			2#12,1#12G,3/4C	20	1		1	20		180			SPARE	32
33	SPARE		180			20	1		1	20			180		SPARE	34
35	SPARE			180		20	1		1	20				180	SPARE	36
37	SPARE	180				20	1		1	20		180			SPARE	38
39	SPARE		180			20	1		1	20			180		SPARE	40
41	SPARE			180		20	1		1	20				180	SPARE	42
		2340	1620	1620								1080	900	900		
		0	0	0							TOTAL DEMAND LOAD	3420	2520	2520	8460	

NO.	DATE	ISSUED FOR	BY
1	4-1-14	100% QA COMMENTS	H.J.V.

PLOT DATE: 6/10/2014 12:43 PM BY: JKS

XREFs= ..\tblock\44238-004-BP3-TB

DESIGNED J.M.B.
DRAWN J.M.B.
CHECKED J.C.B.
PROJ. ENGR. J.C.B.

JOHN C. BURKE P.E.
No. 17301

HAZEN AND SAWYER
Environmental Engineers & Scientists
4000 Hollywood Boulevard, Suite 750N
Hollywood, Florida 33021
Certificate of Authorization Number: 2771

SCALE NA

CLIENTS PROJECT: –
ENGINEERS PROJECT: 44238-004
CAD REFERENCE: 44238-004BP3-E41

NORTH MIAMI FLORIDA
CITY OF NORTH MIAMI
PUBLIC WORKS UTILITIES

WINSON WATER TREATMENT PLANT
BID PACKAGE 3: WTP REHABILITATION

PANEL SCHEDULES
ADMINISTRATION BUILDING

DATE: JUNE 2014
SHEET: 280 OF 335
DRAWING: E-41

PERMITTING

File = H:\44238-004\Drawings\Bid Package 3 - WTP Rehab\Electrical\44238-004BP3-E41 Saved by jbroad Save date = 6/9/2014 5:10 PM

EXISTING DISTRIBUTION PANELBOARD DP1	CKT. NO.	LOAD DESCRIPTION	CONNECTED LOAD	UNITS	CIRCUIT BREAKER POLE	CIRCUIT BREAKER FRAME	CIRCUIT BREAKER TRIP	WIRE SETS	WIRE QTY/SIZE	RACE WAY SIZE	LOCATION: ELECTRIC ROOM 1 REMARKS
600A BUS 480V 3ϕ, 3W+GND 65,000 AIC MAIN LUGS ONLY FED FROM: MCC-2 3P-600A	1	PANELBOARD P1	60	kVA	3	250	150	1	(3) 3/0, (1) #6G	2	NEW IN BID PACKAGE No.1
	2	PANELBOARD P2	76	kVA	3	250	150	1	(3) 3/0, (1) #6G	2	NEW IN BID PACKAGE No.1
	3	TRANSFORMER Tx3	30	kVA	3	40	40	1	(3) #8, (1) #10G	1	FEEDS LP-4, LP-5
	4	TRANSFORMER Tx1	150	kVA	3	250	200	1	(3) 4/0, (1) #6G	2	FEEDS DP-2
	5	PANELBOARD P3	95	kVA	3	250	200	1	(3) 4/0, (1) #6G	2	
	6	SPARE			3	100	30				
	7	SPACE									
	8	SPACE									
CONNECTED LOAD:			411	kVA							
			495	AMPS							

NEW DISTRIBUTION PANELBOARD DP2	CKT. NO.	LOAD DESCRIPTION	CONNECTED LOAD	UNITS	CIRCUIT BREAKER POLE	CIRCUIT BREAKER FRAME	CIRCUIT BREAKER TRIP	WIRE SETS	WIRE QTY/SIZE	RACE WAY SIZE	LOCATION ELECTRIC ROOM 1 REMARKS
400A BUS 208Y/120V 3ϕ, 4W+G 65,000 AIC MAIN LUGS ONLY FED FROM: XMER Tx1 112.5kVA	1	PANELBOARD LP1	41	kVA	3	200	200	1	(3) 3/0, (1) #6G	2	
	2	PANELBOARD LP2	19	kVA	3	100	60	1	(3) 3/0, (1) #6G	2	
	3	PANELBOARD LP3	25	kVA	3	100	20	1	(3) #8, (1) #10G	1	
	4	PANELBOARD LP8	46	kVA	3	150	150	1	(3) 3/0, (1) #6G	2	
	5	PANELBOARD LP9	18	kVA	3	100	100	1	(3) 2, (1) #8G	2	
	6	SPARE			3	100	20				
	7	SPACE									
	8	SPACE									
CONNECTED LOAD:			149	kVA							
			179	AMPS							

NEW DISTRIBUTION PANELBOARD DP3	CKT. NO.	LOAD DESCRIPTION	CONNECTED LOAD	UNITS	CIRCUIT BREAKER POLE	CIRCUIT BREAKER FRAME	CIRCUIT BREAKER TRIP	WIRE SETS	WIRE QTY/SIZE	RACE WAY SIZE	LOCATION: MAIN ELECTRIC ROOM REMARKS
400A BUS 208Y/120V 3ϕ, 3W+GND 65,000 AIC MAIN LUGS ONLY FED FROM: MCC-1 VIA 150kVA Tx5	1	PANEL LP70	14	kVA	3	200	150	1	(3) 3/0, (1) #6G	2	
	2	PANEL LP71	10	kVA	3	200	150	1	(3) 3/0, (1) #6G	2	
	3	PANEL LP72A	27	kVA	3	200	150	1	(3) #8, (1) #10G	1	
	4	PANEL LP72B	12	kVA	3	200	150	1	(3) 4/0, (1) #6G	2	
	5	SPARE			3	100	60				
	6	SPARE			3	100	20				
CONNECTED LOAD:			63	kVA							
			76	AMPS							

NO.	DATE	ISSUED FOR	BY

DESIGNED J.M.B.
DRAWN J.M.B.
CHECKED J.C.B.
PROJ. ENGR. J.C.B.

JOHN C. BURKE P.E.
No. 17301

HAZEN AND SAWYER
Environmental Engineers & Scientists
4000 Hollywood Boulevard, Suite 750N
Hollywood, Florida 33021
Certificate of Authorization Number: 2771

SCALE NA

CLIENTS PROJECT: –
ENGINEERS PROJECT: 44238-004
CAD REFERENCE: 44238-004BP3-E42

NORTH MIAMI FLORIDA
CITY OF NORTH MIAMI
PUBLIC WORKS UTILITIES

WINSON WATER TREATMENT PLANT
BID PACKAGE 3: WTP REHABILITATION
PANEL SCHEDULES
PROCESS AREA
SHEET 1

DATE: JUNE 2014
SHEET: 281 OF 335
DRAWING: E-42

PERMITTING

PLOT DATE: 6/10/2014 12:43 PM BY: IKS
XREFs= ..\block\44238-004-BP3-TB
File = H:\44238-004\Drawings\Bid Package 3 - WTP Rehab\Electrical\44238-004BP3-E42 Saved by jbrood Save date = 6/9/2014 7:36 PM

EXISTING PANEL P1		LOCATED IN FILTER PIPE GALLERY												MAIN LUGS	
225A, 480V, 3PH, 3W		VA LOAD			WIRE/CONDUIT	C.B.		C.B.		WIRE/CONDUIT	VA LOAD			NEMA 4X WALL MOUNT	
NO.	USE	A	B	C	QTY SIZE	TRIP	POLE	POLE	TRIP	QTY SIZE	A	B	C	USE	NO.
1	MOV 31001 FILTER 1 INFLUENT	1400			3#12,1#12G,3/4C	20	3	3	20	3#12,1#12G,3/4C	1400			MOV 33001 FILTER 3 INFLUENT	2
3			1400									1400			4
5				1400									1400		6
7	MOV 31002 FILTER 1 BACKWASH SUPPLY	1400			3#12,1#12G,3/4C	20	3	3	20	3#12,1#12G,3/4C	1400			MOV 33002 FILTER 3 BACKWASH SUPPLY	8
9			1400									1400			10
11				1400									1400		12
13	MOV 31003 FILTER 1 DRAIN	1400			3#12,1#12G,3/4C	20	3	3	20	3#12,1#12G,3/4C	1400			MOV 33003 FILTER 3 DRAIN	14
15			1400									1400			16
17				1400									1400		18
19	MOV 31004 FILTER 1 WASTE BACKWASH	1400			3#12,1#12G,3/4C	20	3	3	20	3#12,1#12G,3/4C	1400			MOV 33004 FILTER 3 WASTE BACKWASH	20
21			1400									1400			22
23				1400									1400		24
25	MOV 31005 FILTER 1 SURFACE WASH	1400			3#12,1#12G,3/4C	20	3	3	20	3#12,1#12G,3/4C	1400			MOV 33005 FILTER 3 SURFACE WASH	26
27			1400									1400			28
29				1400									1400		30
31	MOV 31006 FILTER 1 FLOW CONTROL	1400			3#12,1#12G,3/4C	20	3	3	20	3#12,1#12G,3/4C	1400			MOV 33006 FILTER 3 FLOW CONTROL	32
33			1400									1400			34
35				1400									1400		36
37	MOV 30000 SURFACE SCOUR THROTTLING	1400			3#12,1#12G,3/4C	20	3	3	20	3#12,1#12G,3/4C	1400			MOV 30001 BACKWASH PUMP DISCH	38
39			1400									1400			40
41				1400									1400		42
		9800	9800	9800							9800	9800	9800		
		0	0	0						TOTAL DEMAND	19600	19600	19600	58800	

EXISTING PANEL P2		LOCATED IN FILTER PIPE GALLERY												MAIN LUGS	
225A, 480V, 3PH, 3W		VA LOAD			WIRE/CONDUIT	C.B.		C.B.		WIRE/CONDUIT	VA LOAD			NEMA 4X WALL MOUNT	
NO.	USE	A	B	C	QTY SIZE	TRIP	POLE	POLE	TRIP	QTY SIZE	A	B	C	USE	NO.
1	MOV 32001 FILTER 2 INFLUENT	1400			3#12,1#12G,3/4C	20	3	3	20	3#12,1#12G,3/4C	1400			MOV 34001 FILTER 4 INFLUENT	2
3			1400									1400			4
5				1400									1400		6
7	MOV 32002 FILTER 2 BACKWASH SUPPLY	2000			3#12,1#12G,3/4C	20	3	3	20	3#12,1#12G,3/4C	1400			MOV 34002 FILTER 4 BACKWASH SUPPLY	8
9			2000									1400			10
11				2000									1400		12
13	MOV 32003 FILTER 2 DRAIN	1400			3#12,1#12G,3/4C	20	3	3	20	3#12,1#12G,3/4C	1400			MOV 34003 FILTER 4 DRAIN	14
15			1400									1400			16
17				1400									1400		18
19	MOV 32004 FILTER 2 WASTE BACKWASH	1400			3#12,1#12G,3/4C	20	3	3	20	3#12,1#12G,3/4C	1400			MOV 34004 FILTER 4 WASTE BACKWASH	20
21			1400	1400								1400			22
23				1400									1400		24
25	MOV 32005 FILTER 2 SURFACE WASH	1400			3#12,1#12G,3/4C	20	3	3	20	3#12,1#12G,3/4C	1400			MOV 34005 FILTER 4 SURFACE WASH	26
27			1400									1400			28
29				1400									1400		30
31	MOV 32006 FILTER 2 FLOW CONTROL	1400			3#12,1#12G,3/4C	20	3	3	20	3#12,1#12G,3/4C	1400			MOV 34006 FILTER 4 FLOW CONTROL	32
33			1400									1400			34
35				1400									1400		36
37	CMPR 73100 AIR COMPRESSOR	1400			3#12,1#12G,3/4C	20	3	3	20	3#8,1#10G,1C	6000			30kVA LIGHTING TRANSFORMER	38
39			1400									6000			40
41				1400									6000		42
		10400	10400	11800							14400	14400	14400		
		0	0	0						TOTAL DEMAND	24800	24800	26200	75800	

EXISTING PANEL LP7		LOCATED IN FILTER PIPE GALLERY												MAIN LUGS	
225A,208Y/120V,3PH,4W		VA LOAD			WIRE/CONDUIT	C.B.		C.B.		WIRE/CONDUIT	VA LOAD			NEMA 4X WALL MOUNT	
NO.	USE	A	B	C	QTY SIZE	TRIP	POLE	POLE	TRIP	QTY SIZE	A	B	C	USE	NO.
1	PIPE GALLERY LIGHTING	700			2#12,1#12G,3/4C	20	1	1	20	2#12,1#12G,3/4C	180			FIT 31000	2
3	RECEPTACLES		720		2#12,1#12G,3/4C	20	1	1	20	2#12,1#12G,3/4C		180		FIT 32000	4
5	FILTERS-WALL PACKS			200	2#12,1#12G,3/4C	20	1	1	20	2#12,1#12G,3/4C			180	FIT 33000	6
7	VENTILATOR	720			2#12,1#12G,3/4C	20	1	1	20	2#12,1#12G,3/4C	180			FIT 34000	8
9	PIPE GALLERY LIGHTING		200		2#12,1#12G,3/4C	20	1	1	20	2#12,1#12G,3/4C		180		AE/AIT 31000	10
11	RECEPTACLES			360	2#12,1#12G,3/4C	20	1	1	20				180	AE/AIT 32000	12
13	SPARE	360				20	1	1	20		180			AE/AIT 33000	14
15	CAP-56200 (ICA)		360		2#12,1#12G,3/4C	20	1	1	20			180		AE/AIT 34000	16
17	CAP-56200 (ICA)			360	2#12,1#12G,3/4C	20	1	1	20	2#12,1#12G,3/4C			180	AE/AIT 43000	18
19	MIX-56201 (ICA)	720			2#12,1#12G,3/4C	20	1	1	20	2#12,1#12G,3/4C	180			LE/LT 31000	20
21	FLP-56300 (ICA)		360		2#12,1#12G,3/4C	20	1	1	20	2#12,1#12G,3/4C		180		LE/LT 32000	22
23	FWI-56300 (ICA)			180	2#12,1#12G,3/4C	20	1	1	20	2#12,1#12G,3/4C			180	LE/LT 33000	24
25	CONV OUTLET (ICA)	180			2#12,1#12G,3/4C	20	1	1	20	2#12,1#12G,3/4C	180			LE/LT 34000	26
27	FS 56000 (ICA)		180		2#12,1#12G,3/4C	20	1	1	20			180		SPARE	28
29	SPARE			180		20	1	1	20				180	SPARE	30
31	SPARE	180				20	1	1	20		180			SPARE	32
33	SPARE		180			20	1	1	20			180		SPARE	34
35	SPARE			180		20	1	1	20				180	SPARE	36
37	SPARE	180				20	1	1	20		180			SPARE	38
39	SPARE		180			20	1	1	20			180		SPARE	40
41	SPARE			180		20	1	1	20				180	SPARE	42
		2860	1820	1280							1080	900	900		
	(ICA) = INTERIM CHEM	0	0	0						TOTAL DEMAND LOAD	3940	2720	2180	8840	

PANEL P3		LOCATED IN FILTER BLDG ELEC RM 1												MAIN LUGS	
225A, 480V, 3PH, 3W		VA LOAD			WIRE/CONDUIT	C.B.		C.B.		WIRE/CONDUIT	VA LOAD			NEMA 4X WALL MOUNT	
NO.	USE	A	B	C	QTY SIZE	TRIP	POLE	POLE	TRIP	QTY SIZE	A	B	C	USE	NO.
1	MOV 22001 LIME CONTACTOR SLUDGE WASTING BLOW OFF VALVE 1	1400			3#12,1#12G,3/4C	20	3	3	60	3#6,1#10G,1C	12000			LCP 60000 WASTE LIME SLUDGE PS	2
3			1400									12000			4
5				1400									12000		6
7	MOV 22002 LIME CONTACTOR SLUDGE WASTING BLOW OFF VALVE 2	1400			3#12,1#12G,3/4C	20	3	3	30	3#10,1#12G,3/4C	5500			PLC 23100	8
9			1400									5500			10
11				1400									5500		12
13	MOV 22003 LIME CONTACTOR SLUDGE WASTING BLOW OFF VALVE 3	1400			3#12,1#12G,3/4C	20	3	3	30	3#10,1#12G,3/4C	5500			PLC 23200	14
15			1400									5500			16
17				1400									5500		18
19	MOV 22004 LIME CONTACTOR SLUDGE WASTING BLOW OFF VALVE 4	1400			3#12,1#12G,3/4C	20	3	3	20					SPARE	20
21			1400												22
23				1400											24
25	MOV 22005 LIME CONTACTOR CENTER DRAIN VALVE	1400			3#12,1#12G,3/4C	20	3	3	20					SPARE	26
27			1400												28
29				1400											30
31	SPARE	1400				20	3	3	20					SPARE	32
33			1400												34
35				1400											36
37	SPARE					20	3	3	20					SPARE	38
39															40
41															42
		8400	8400	8400							23000	23000	23000		
		0	0	0						TOTAL DEMAND	31400	31400	31400	94200	

NO.	DATE	ISSUED FOR	BY

DESIGNED J.M.B.
DRAWN J.M.B.
CHECKED J.C.B.
PROJ. ENGR. J.C.B.

JOHN C. BURKE P.E.
No. 17301

HAZEN AND SAWYER
Environmental Engineers & Scientists
4000 Hollywood Boulevard, Suite 750N
Hollywood, Florida 33021
Certificate of Authorization Number: 2771

SCALE NA

CLIENTS PROJECT: –
ENGINEERS PROJECT: 44238-004
CAD REFERENCE: 44238-004BP3-E43

NORTH MIAMI FLORIDA
CITY OF NORTH MIAMI
PUBLIC WORKS UTILITIES

WINSON WATER TREATMENT PLANT
BID PACKAGE 3: WTP REHABILITATION
PANEL SCHEDULES
PROCESS AREA
SHEET 2

DATE: JUNE 2014
SHEET: 282 OF 335
DRAWING: E-43

PERMITTING

PLOT DATE: 6/10/2014 12:45 PM BY: IKS
XREFs= ..\Tblock\44238-004-BP3-TB
File = H:\44238-004\Drawings\Bid Package 3 - WTP Rehab\Electrical\44238-004BP3-E43 Saved by jbrood Save date = 6/9/2014 6:33 PM

EXISTING PANEL LP1		EXISTING FILTER BLDG 1ST FL ELEC ROOM												MAIN LUGS	
225A,208Y/120V,3PH,4W		VA LOAD			WIRE/CONDUIT	C.B.			C.B.		WIRE/CONDUIT	VA LOAD			
NO.	USE	A	B	C	QTY SIZE	TRIP	P	P	TRIP	QTY SIZE	A	B	C	USE	NO.
1	LIME SLAKER VIB PNL	720			2#12,1#12G,3/4C	20	1	1	20	2#12,1#12G,3/4C	180			INTERIOR LIGHTING	2
3	EXISTING CIRCUIT		180			20	1	1	20	2#12,1#12G,3/4C		180		RECEPTACLES	4
5	EXISTING CIRCUIT			180		20	1	1	20				180	EXISTING CIRCUIT	6
7	EXISTING CIRCUIT	180				20	1	1	20		180			EXISTING CIRCUIT	8
9	EXISTING CIRCUIT		180			20	1	1	20			180		EXISTING CIRCUIT	10
11	EXISTING CIRCUIT			180		20	1	1	20				180	EXISTING CIRCUIT	12
13	EXISTING CIRCUIT	180				20	1	1	20		180			EXISTING CIRCUIT	14
15	EXISTING CIRCUIT		180			20	1	1	20			180		EXISTING CIRCUIT	16
17	EXISTING CIRCUIT			180		20	1	1	20				180	EXISTING CIRCUIT	18
19	EXISTING CIRCUIT	180				20	1	1	20		180			EXISTING CIRCUIT	20
21	EXISTING CIRCUIT		180			20	1	1	20			180		EXISTING CIRCUIT	22
23	EXISTING CIRCUIT			180		20	1	1	20				180	EXISTING CIRCUIT	24
25	EXISTING CIRCUIT	180				20	1	1	20		180			EXISTING CIRCUIT	26
27	EXISTING CIRCUIT		180			20	1	1	20			180		EXISTING CIRCUIT	28
29	EXISTING CIRCUIT			180		20	1	1	20				180	EXISTING CIRCUIT	30
31	EXISTING CIRCUIT	180				20	1	1	20		180			EXISTING CIRCUIT	32
33	EXISTING CIRCUIT		180			20	1	1	20			180		EXISTING CIRCUIT	34
35	EXISTING CIRCUIT			180		20	1	1	20				180	EXISTING CIRCUIT	36
37	EXISTING CIRCUIT	180				20	1	1	20		180			EXISTING CIRCUIT	38
39	EXISTING CIRCUIT		180			20	1	1	20			180		EXISTING CIRCUIT	40
41	EXISTING CIRCUIT			180		20	1	1	20				180	EXISTING CIRCUIT	42
		1620	900	900							1080	900	900		
		0	0	0						TOTAL DEMAND LOAD	2700	1800	1800	6300	

EXISTING PANEL LP2		EXISTING FILTER BLDG 2ND FL CONTROL ROOM												MAIN LUGS	
225A,208Y/120V,3PH,4W		VA LOAD			WIRE/CONDUIT	C.B.			C.B.		WIRE/CONDUIT	VA LOAD			
NO.	USE	A	B	C	QTY SIZE	TRIP	P	P	TRIP	QTY SIZE	A	B	C	USE	NO.
1	EXISTING CIRCUIT	180			2#12,1#12G,3/4C	20	1	1	20	2#12,1#12G,3/4C	180			INTERIOR LIGHTING	2
3	EXISTING CIRCUIT		180		2#12,1#12G,3/4C	20	1	1	20	2#12,1#12G,3/4C		180		EXTERIOR LIGHTING	4
5	EXISTING CIRCUIT			180	2#12,1#12G,3/4C	20	1	1	20	2#12,1#12G,3/4C			180	RECEPTACLES	6
7	EXISTING CIRCUIT	180			2#12,1#12G,3/4C	20	1	1	20	2#12,1#12G,3/4C	180			RECEPTACLES	8
9	EXISTING CIRCUIT		180		2#12,1#12G,3/4C	20	1	1	20	2#12,1#12G,3/4C		180		RECEPTACLES	10
11	EXISTING CIRCUIT			180	2#12,1#12G,3/4C	20	1	1	20				180	EXISTING CIRCUIT	12
13	EXISTING CIRCUIT	180			2#12,1#12G,3/4C	20	1	1	20		180			EXISTING CIRCUIT	14
15	EXISTING CIRCUIT		180		2#12,1#12G,3/4C	20	1	1	20			180		EXISTING CIRCUIT	16
17	EXISTING CIRCUIT			180	2#12,1#12G,3/4C	20	1	1	20				180	EXISTING CIRCUIT	18
19	EXISTING CIRCUIT	180			2#12,1#12G,3/4C	20	1	1	20		180			EXISTING CIRCUIT	20
21	EXISTING CIRCUIT		180		2#12,1#12G,3/4C	20	1	1	20			180		EXISTING CIRCUIT	22
23	EXISTING CIRCUIT			180	2#12,1#12G,3/4C	20	1	1	20				180	EXISTING CIRCUIT	24
		720	720	720							720	720	720		
		0	0	0						TOTAL DEMAND LOAD	1440	1440	1440	4320	

EXISTING PANEL LP3		EXISTING FILTER BLDG 2ND FL CONSOLE THIS PANEL ONLY FEEDS EQUIPMENT WITHIN THE CONSOLE												MAIN LUGS	
225A,208Y/120V,3PH,4W		VA LOAD			WIRE/CONDUIT	C.B.			C.B.		WIRE/CONDUIT	VA LOAD			
NO.	USE	A	B	C	QTY SIZE	TRIP	P	P	TRIP	QTY SIZE	A	B	C	USE	NO.
1	EXISTING CIRCUIT	180			2#12,1#12G,3/4C	20	1	1	20	2#12,1#12G,3/4C	180			INTERIOR LIGHTING	2
3	EXISTING CIRCUIT		180		2#12,1#12G,3/4C	20	1	1	20	2#12,1#12G,3/4C		180		RECEPTACLES	4
5	EXISTING CIRCUIT			180	2#12,1#12G,3/4C	20	1	1	20	2#12,1#12G,3/4C			180	EXISTING CIRCUIT	6
7	EXISTING CIRCUIT	180			2#12,1#12G,3/4C	20	1	1	20	2#12,1#12G,3/4C	180			EXISTING CIRCUIT	8
9	EXISTING CIRCUIT		180		2#12,1#12G,3/4C	20	1	1	20	2#12,1#12G,3/4C		180		EXISTING CIRCUIT	10
11	EXISTING CIRCUIT			180	2#12,1#12G,3/4C	20	1	1	20				180	SPARE	12
		360	360	360							360	360	360		
		0	0	0						TOTAL DEMAND LOAD	720	720	720	2160	

NOTE:
THE PANELS ON THIS DRAWING ARE EXISTING AND HAVE NOT BEEN INVESTIGATED AS TO THE NUMBER OF ACTIVE CIRCUITS NOR THE ACTUAL LOADS ON EACH CIRCUIT. MOST OF THE CIRCUITS WILL REMAIN IN USE UNLESS EQUIPMENT IS SCHEDULED TO BE FED FROM ONE OF THE NEWER PANELS.

EXISTING PANEL LP4		EXISTING FILTER BLDG PIPE GALLERY												MAIN LUGS	
225A,208Y/120V,3PH,4W		VA LOAD			WIRE/CONDUIT	C.B.			C.B.		WIRE/CONDUIT	VA LOAD			
NO.	USE	A	B	C	QTY SIZE	TRIP	P	P	TRIP	QTY SIZE	A	B	C	USE	NO.
1	INTERIOR LIGHTING	700			2#12,1#12G,3/4C	20	1	1	20	2#12,1#12G,3/4C	180			INTERIOR LIGHTING	2
3	RECEPTACLES		720		2#12,1#12G,3/4C	20	1	1	20	2#12,1#12G,3/4C		180		TURBIDITY METER	4
5	EXISTING CIRCUIT			200		20	1	1	20	2#12,1#12G,3/4C			180	CL2 DETECTOR	6
7	EXISTING CIRCUIT	180				20	1				5000			LAB PANEL	8
9	EXISTING CIRCUIT		180			20	1	3	70	3#4,1#8G,1C		5000			10
11	EXISTING CIRCUIT			180		20	1						5000		12
13	EXISTING CIRCUIT	180				20	1	1	20		180			EXISTING CIRCUIT	14
15	CONTROL CIRCUIT		180		2#12,1#12G,3/4C	20	1	1	20			180		EXISTING CIRCUIT	16
17	CONTROL AQUATROL			180	2#12,1#12G,3/4C	20	1	1	20				180	EXISTING CIRCUIT	18
19	RECP PHONE BELL	180			2#12,1#12G,3/4C	20	1	1	20		180			EXISTING CIRCUIT	20
21	EXISTING CIRCUIT		180			20	1	1	20			180		EXISTING CIRCUIT	22
23	EXISTING CIRCUIT			180		20	1	1	20				180	EXISTING CIRCUIT	24
25	EXISTING CIRCUIT	180				20	1	1	20	2#12,1#12G,3/4C	180			POWER PROTECTION	26
27	EXISTING CIRCUIT		180			20	1	1	20	2#12,1#12G,3/4C		180		POWER PROTECTION	28
29	EXISTING CIRCUIT			180		20	1	1	20	2#12,1#12G,3/4C			180	RECP. COMPUTER	30
31	SOUTH GATE (1/2HP)	1200			2#12,1#12G,3/4C	20	1	2	60		180			SPARE	32
33	MAIN GATE (1/2 HP)		1200		2#12,1#12G,3/4C	20	1					180			34
35	SPARE			1440		20	2	2	20				180	SPARE	36
37		1440									180				38
39	STOVE		3600		2#6,1#10G,3/4C	50	2	2	40	2#8,1#10G,1C		2880		AC COMPRESSOR	40
41				3600									2880		42
		2620	1440	920							5900	5720	5720		
		0	0	0						TOTAL DEMAND LOAD	8520	7160	6640	22320	

NO.	DATE	ISSUED FOR	BY

DESIGNED J.M.B.
DRAWN J.M.B.
CHECKED J.C.B.
PROJ. ENGR. J.C.B.

JOHN C. BURKE P.E.
No. 56076

HAZEN AND SAWYER
Environmental Engineers & Scientists
4000 Hollywood Boulevard, Suite 750N
Hollywood, Florida 33021
Certificate of Authorization Number: 2771

SCALE NA

CLIENTS PROJECT: –
ENGINEERS PROJECT: 44238-004
CAD REFERENCE: 44238-004BP3-E44

CITY OF NORTH MIAMI
PUBLIC WORKS UTILITIES

WINSON WATER TREATMENT PLANT
BID PACKAGE 3: WTP REHABILITATION
PANEL SCHEDULES
PROCESS AREA
SHEET 3

DATE: JUNE 2014
SHEET: 283 OF 335
DRAWING: E-44

PERMITTING

PLOT DATE: 6/10/2014 12:46 PM BY: HS
XREFs= ..\Titleck\44238-004-BP3-TB
File = H:\44238-004\Drawings\Bid Package 3 - WTP Rehab\Electrical\44238-004BP3-E44 Saved by HScalfi Save date = 6/9/2014 6:05 PM

EXISTING PANEL LP5		EXISTING FILTER BLDG 2ND FL LAB													MAIN LUGS	
225A,208Y/120V,3PH,4W		VA LOAD			WIRE/CONDUIT	C.B.			C.B.		WIRE/CONDUIT	VA LOAD				
NO.	USE	A	B	C	QTY SIZE	TRIP	P		P	TRIP	QTY SIZE	A	B	C	USE	NO.
1	AE/AIT 41510	360			2#12,1#12G,3/4C	20	1		1	20	2#12,1#12G,3/4C	180			OFFICE OUTLET NORTH	2
3	INTERIOR LIGHTING		720		2#12,1#12G,3/4C	20	1		1	20	2#12,1#12G,3/4C		360		OUTDOOR LIGHTS SOUTH	4
5	EXTERIOR LIGHTING			200	2#12,1#12G,3/4C	20	1		1	20	2#12,1#12G,3/4C			180	OFFICE OUTLET EAST	6
7	AE/AIT 41511	360			2#12,1#12G,3/4C	20	1		1	20	2#12,1#12G,3/4C	180			BATHROOM	8
9	AE/AIT 41512		360		2#12,1#12G,3/4C	20	1		1	20	2#12,1#12G,3/4C		360		OUTDOOR LIGHTS EAST	10
11	AE/AIT 41520			360	2#12,1#12G,3/4C	20	1		1	20	2#12,1#12G,3/4C			180	ACCELATOR LIGHTS	12
13	WATER HEATER	1200			2#12,1#12G,3/4C	20	1		1	20	2#12,1#12G,3/4C	180			OPER CONSOLE WEST	14
15	OPER CONSOLE EAST		720		2#12,1#12G,3/4C	20	1		1	20	2#12,1#12G,3/4C		180		RADIO	16
17	QUAD OUTLETS			720	2#12,1#12G,3/4C	20	1		1	20	2#12,1#12G,3/4C			180	LAB RECEPTACLE	18
19	AE/AIT 41530	360			2#12,1#12G,3/4C	20	1		1	20	2#12,1#12G,3/4C	360			AE/AIT 22020	20
21	AE/AIT 41540		360		2#12,1#12G,3/4C	20	1		1	20	2#12,1#12G,3/4C		360		AE/AIT 22021	22
23	AE/AIT 41550			360	2#12,1#12G,3/4C	20	1		1	20				180	SPARE	24
		2280	2160	1640								900	1260	720		
		0	0	0							TOTAL DEMAND LOAD	3180	3420	2360	8960	

ALL CIRCUITS MARKED NEW IN EXISTING PANELS SHALL INCLUDE NEW CIRCUIT BREAKERS.

EXISTING PANEL LP6		EXISTING ELEC ROOM NO.2													MAIN LUGS	
225A,208Y/120V,3PH,4W		VA LOAD			WIRE/CONDUIT	C.B.			C.B.		WIRE/CONDUIT	VA LOAD				
NO.	USE	A	B	C	QTY SIZE	TRIP	P		P	TRIP	QTY SIZE	A	B	C	USE	NO.
1	SPARE MAIN	0			NA	100	3		1	20	2#12,1#12G	200			INTERIOR LIGHTS	2
3			0						1	20	2#12,1#12G		180		RECEPTACLES	4
5				0					1	20	2#12,1#12G			360	OUTSIDE LIGHTS	6
7	GENERATOR ENCLOSURE PANEL	1800			4#6,1#10G	60	3		1	20	2#12,1#12G	1800			AIR CONDITIONER	8
9			1800												SPACE	10
11				1800											SPACE	12
13	SPACE														SPACE	14
15	SPACE														SPACE	16
17	SPACE														SPACE	18
19	SPACE														SPACE	20
21	SPACE														SPACE	22
23	SPACE														SPACE	24
25	SPACE														SPACE	26
27	SPACE														SPACE	28
29	SPACE														SPACE	30
		1800	1800	1800								2000	180	360		
		0	0	0							TOTAL DEMAND LOAD	3800	1980	2160	7940	

PANEL LP8		CHEMICAL HANDLING FACILITY													MAIN LUGS	
225A,208Y/120V,3PH,4W		VA LOAD			WIRE/CONDUIT	C.B.			C.B.		WIRE/CONDUIT	VA LOAD				
NO.	USE	A	B	C	QTY SIZE	TRIP	P		P	TRIP	QTY SIZE	A	B	C	USE	NO.
1	PLC-50000	700			2#12,1#12G,3/4C	20	1		1	20	2#12,1#12G,3/4C	900			INTERIOR LIGHTING	2
3	LCP-55100 ANTI-COAG		720		2#12,1#12G,3/4C	20	1		1	20	2#12,1#12G,3/4C		180		RECEPTACLES	4
5	LCP-53000 COAG			200	2#12,1#12G,3/4C	20	1		1	20	2#12,1#12G,3/4C			180	SUMP PUMP RECP	6
7	LCP-52100 FLUORIDE	720			2#12,1#12G,3/4C	20	1		1	20	2#12,1#12G,3/4C	180			SUMP PUMP RECP	8
9	LCP-52020 FLUOR TP		200		2#12,1#12G,3/4C	20	1		1	20	2#12,1#12G,3/4C		180		SUMP PUMP RECP	10
11	LCP-54100 AMMONIA			360	2#12,1#12G,3/4C	20	1		1	20	2#12,1#12G,3/4C			180	FIT 30000	12
13	LCP-53100 COAG AID SKID PANEL	360			2#12,1#12G,3/4C	20	1		1	20	2#12,1#12G,3/4C	180			FIT 30005	14
15	LCP-52000 FLUORIDE UNLOADING PANEL		200		2#12,1#12G,3/4C	20	1		1	20	2#12,1#12G,3/4C		180		LIT 23000	16
17	LCP-54000 AMMONIA UNLOADING PANEL			180	2#12,1#12G,3/4C	20	1		1	20	2#12,1#12G,3/4C			180	LIT 41000	18
19	LCP-56000 CHEM LEAK DETECTION PANEL	180			2#12,1#12G,3/4C	20	1		1	20	2#12,1#12G,3/4C	180			FIT 43000	20
21	EF-50010 1/4HP		720		2#12,1#12G,3/4C	20	1		1	20	2#12,1#12G,3/4C		360		FS 53200,52135, 52136,54011,54012	22
23	EF-50020 1/4HP			720	2#12,1#12G,3/4C	20	1		1	20				180	SPARE	24
25	EF-50030 1/4HP	720			2#12,1#12G,3/4C	20	1		1	20		180			SPARE	26
27	MOV 52001		720		2#12,1#12G,3/4C	20	1		1	20			180		SPARE	28
29	SPARE			180		20	1		1	20				180	SPARE	30
31	SPARE	180				20	1		1	20		180			SPARE	32
33	SPARE		180			20	1		1	20			180		SPARE	34
35	SPARE			180		20	1		1	20				180	SPARE	36
37	SPARE	180				20	1		1	20		180			SPARE	38
39	SPARE		180			20	1		1	20			180		SPARE	40
41	SPARE			180		20	1		1	20				180	SPARE	42
		2860	2560	1640								1800	1080	900		
		0	0	0							TOTAL DEMAND LOAD	4660	3640	2540	10840	

PANEL LP9		SODIUM HYPOCHLORITE FACILITY													MAIN LUGS	
225A,208Y/120V,3PH,4W		VA LOAD			WIRE/CONDUIT	C.B.			C.B.		WIRE/CONDUIT	VA LOAD				
NO.	USE	A	B	C	QTY SIZE	TRIP	P		P	TRIP	QTY SIZE	A	B	C	USE	NO.
1	SPARE	180				20	1		1	20	2#12,1#12G,3/4C	420			INTERIOR LIGHTING	2
3	SPARE		180			20	1		1	20			180		SPARE	4
5	SPARE			180		20	1		1	20	2#12,1#12G,3/4C			1800	SUMP PUMP	6
7	LCP 51010 TRANSFER PUMPS	2500			3#10,1#12G,3/4C	20	3		1	20	2#12,1#12G,3/4C	180			RECEPTACLES	8
9			2500						1	20	2#12,1#12G,3/4C		360		RECEPTACLES	10
11				2500					1	20	2#12,1#12G,3/4C			180	PLC 51000	12
13	LCP 51100 SKID 1	1800			3#12,1#12G,3/4C	20	2		1	20	2#12,1#12G,3/4C	180			FIT 10000	14
15			1800						1	20	2#12,1#12G,3/4C		180		LIT 62001	16
17	LCP 51200 SKID 2			1800	3#12,1#12G,3/4C	20	2		1	20	2#12,1#12G,3/4C			180	LIT 62002	18
19		1800							1	20	2#12,1#12G,3/4C	180			FIT 11001	20
21	PLC 51000		360		2#12,1#12G,3/4C	20	1		1	20	2#12,1#12G,3/4C		180		LIT 11001	22
23	LCP 56001 LEAK DETECTION			180	2#12,1#12G,3/4C	20	1		1	20	2#12,1#12G,3/4C			180	FSH 51015, 51016	24
25	LCP 51000 UNLOADING CONTROL	360			2#12,1#12G,3/4C	20	1		1	20	2#12,1#12G,3/4C	1800			MOG 77100	26
27	MOV 61000		720		2#12,1#12G,3/4C	20	1		1	20	2#12,1#12G,3/4C		1800		MOG 77500	28
29	MOV 62000			720	2#12,1#12G,3/4C	20	1		1	20				180	SPARE	30
31	FE/FIT 62000	360			2#12,1#12G,3/4C	20	1		1	20		180			SPARE	32
33	SPARE		180			20	1		1	20			180		SPARE	34
35	SPARE			180		20	1		1	20				180	SPARE	36
37	SPARE	180				20	1		1	20		180			SPARE	38
39	SPARE		180			20	1		1	20			180		SPARE	40
41	SPARE			180		20	1		1	20				180	SPARE	42
		7000	5560	5380								2940	2700	2520		
		0	0	0							TOTAL DEMAND LOAD	9940	8260	7900	26100	

NO.	DATE	ISSUED FOR	BY
1	4-1-14	100% QA COMMENTS	H.J.V.

PLOT DATE: 6/10/2014 12:48 PM BY: JKS

XREFs= ..\Tblock\44238-004-BP3-TB

DESIGNED J.M.B.
DRAWN J.M.B.
CHECKED J.C.B.
PROJ. ENGR. J.C.B.

JOHN C. BURKE P.E.
No. 17301

HAZEN AND SAWYER
Environmental Engineers & Scientists
4000 Hollywood Boulevard, Suite 750N
Hollywood, Florida 33021
Certificate of Authorization Number: 2771

SCALE NA

CLIENTS PROJECT: –
ENGINEERS PROJECT: 44238-004
CAD REFERENCE: 44238-004BP3-E45

NORTH MIAMI FLORIDA
CITY OF NORTH MIAMI
PUBLIC WORKS UTILITIES

WINSON WATER TREATMENT PLANT
BID PACKAGE 3: WTP REHABILITATION
PANEL SCHEDULES
PROCESS AREA
SHEET 4

DATE: JUNE 2014
SHEET: 284 OF 335
DRAWING: E-45

PERMITTING

File = H:\44238-004\Drawings\Bid Package 3 - WTP Rehab\Electrical\44238-004BP3-E45 Saved by jbrood Save date = 6/9/2014 8:51 PM

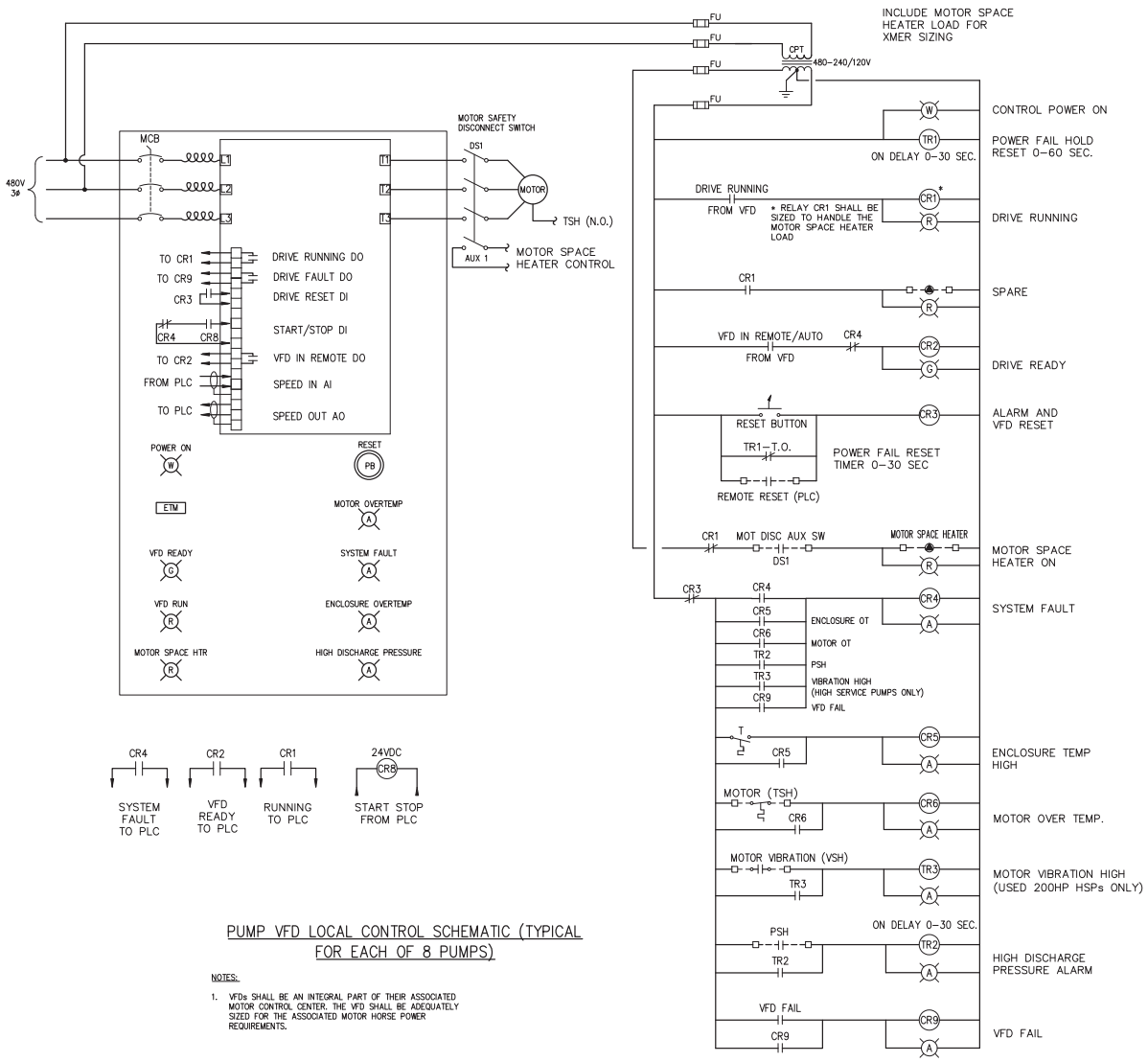

PUMP VFD LOCAL CONTROL SCHEMATIC (TYPICAL FOR EACH OF 8 PUMPS)

NOTES:

1. VFDs SHALL BE AN INTEGRAL PART OF THEIR ASSOCIATED MOTOR CONTROL CENTER. THE VFD SHALL BE ADEQUATELY SIZED FOR THE ASSOCIATED MOTOR HORSE POWER REQUIREMENTS.

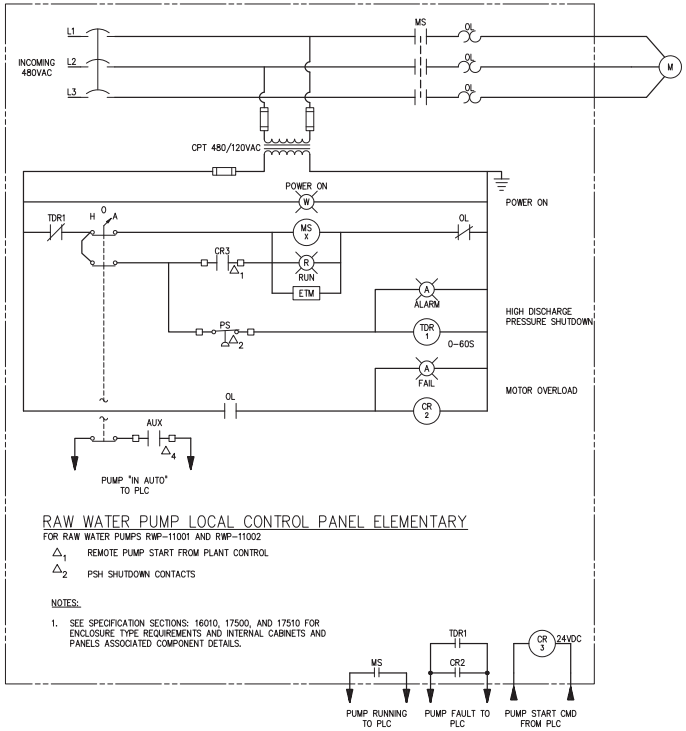

RAW WATER PUMP LOCAL CONTROL PANEL ELEMENTARY

FOR RAW WATER PUMPS RWP-11001 AND RWP-11002

Δ_1 REMOTE PUMP START FROM PLANT CONTROL

Δ_2 PSH SHUTDOWN CONTACTS

NOTES:

1. SEE SPECIFICATION SECTIONS: 16010, 17500, AND 17510 FOR ENCLOSURE TYPE REQUIREMENTS AND INTERNAL CABINETS AND PANELS ASSOCIATED COMPONENT DETAILS.

NO.	DATE	ISSUED FOR	BY

DESIGNED J.M.B.
DRAWN G.P.B.
CHECKED J.C.B.
PROJ. ENGR. J.C.B.

JOHN C. BURKE P.E.
No. 17301

HAZEN AND SAWYER
Environmental Engineers & Scientists
4000 Hollywood Boulevard, Suite 750N
Hollywood, Florida 33021
Certificate of Authorization Number: 2771

SCALE –

CLIENTS PROJECT: –
ENGINEERS PROJECT: 44238-004
CAD REFERENCE: 44238-004BP3-E46

NORTH MIAMI FLORIDA
CITY OF NORTH MIAMI
PUBLIC WORKS UTILITIES

WINSON WATER TREATMENT PLANT
BID PACKAGE 3: WTP REHABILITATION
SCHEMATICS
SHEET 1

DATE: JUNE 2014
SHEET: 285 OF 335
DRAWING: E-46

PERMITTING

PLOT DATE: 6/10/2014 12:49 PM BY: NS
XREFs= ..\block\44238-004-BP3-TB
File = H:\44238-004\Drawings\Bid Package 3 - WTP Rehab\Electrical\44238-004BP3-E46 Saved by jbrood Save date = 6/9/2014 9:17 PM

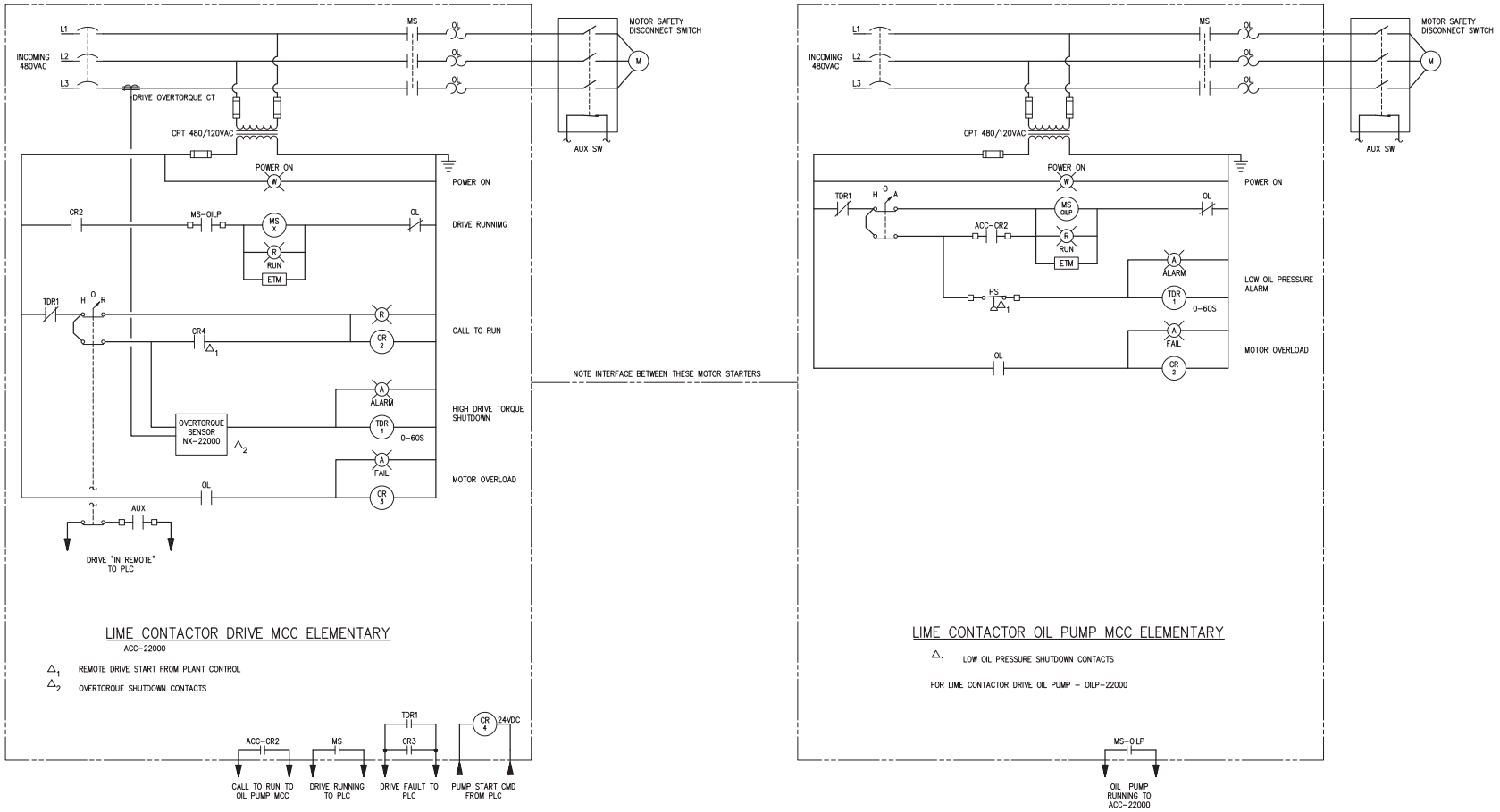

LIME CONTACTOR DRIVE MCC ELEMENTARY

ACC-22000

△1 REMOTE DRIVE START FROM PLANT CONTROL

△2 OVERTORQUE SHUTDOWN CONTACTS

LIME CONTACTOR OIL PUMP MCC ELEMENTARY

△1 LOW OIL PRESSURE SHUTDOWN CONTACTS

FOR LIME CONTACTOR DRIVE OIL PUMP – OILP-22000

NO.	DATE	ISSUED FOR	BY

DESIGNED J.M.B.
DRAWN J.M.B.
CHECKED J.C.B.
PROJ. ENGR. J.C.B.

JOHN C. BURKE P.E.
No. 17301

HAZEN AND SAWYER
Environmental Engineers & Scientists
4000 Hollywood Boulevard, Suite 750N
Hollywood, Florida 33021
Certificate of Authorization Number: 2771

SCALE –

CLIENTS PROJECT: –
ENGINEERS PROJECT: 44238-004
CAD REFERENCE: 44238-004BP3-E47

NORTH MIAMI FLORIDA
CITY OF NORTH MIAMI
PUBLIC WORKS UTILITIES

WINSON WATER TREATMENT PLANT
BID PACKAGE 3: WTP REHABILITATION
SCHEMATICS
SHEET 2

DATE: JUNE 2014
SHEET: 286 OF 335
DRAWING: E-47

PERMITTING

PLOT DATE: 6/10/2014 12:50 PM BY: JKS
XREFs= ..\Tblock\44238-004-BP3-TB
File = H:\44238-004\Drawings\Bid Package 3 - WTP Rehab\Electrical\44238-004BP3-E47 Saved by jbrood Save date = 6/9/2014 6:05 PM

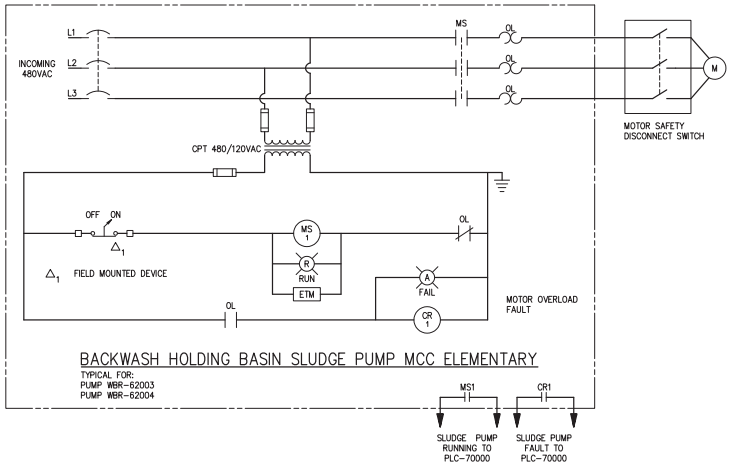

BACKWASH HOLDING BASIN SLUDGE PUMP MCC ELEMENTARY

TYPICAL FOR:
PUMP WBR-62003
PUMP WBR-62004

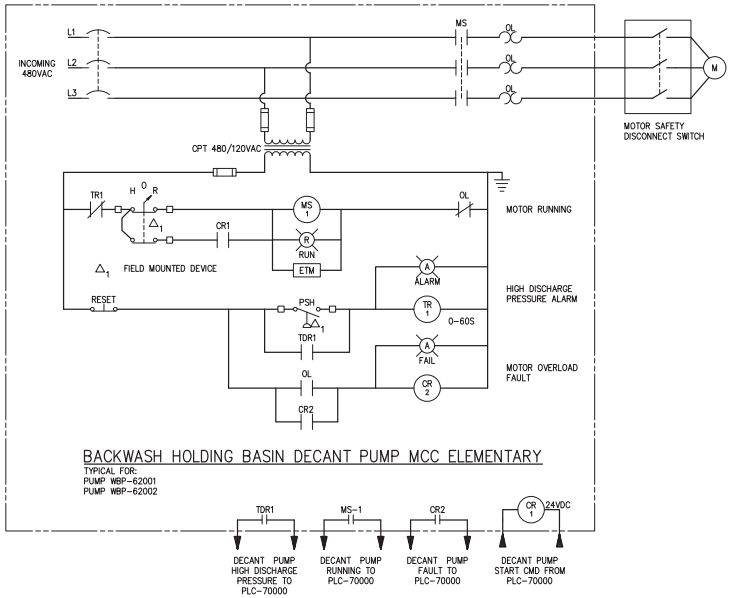

BACKWASH HOLDING BASIN DECANT PUMP MCC ELEMENTARY

TYPICAL FOR:
PUMP WBP-62001
PUMP WBP-62002

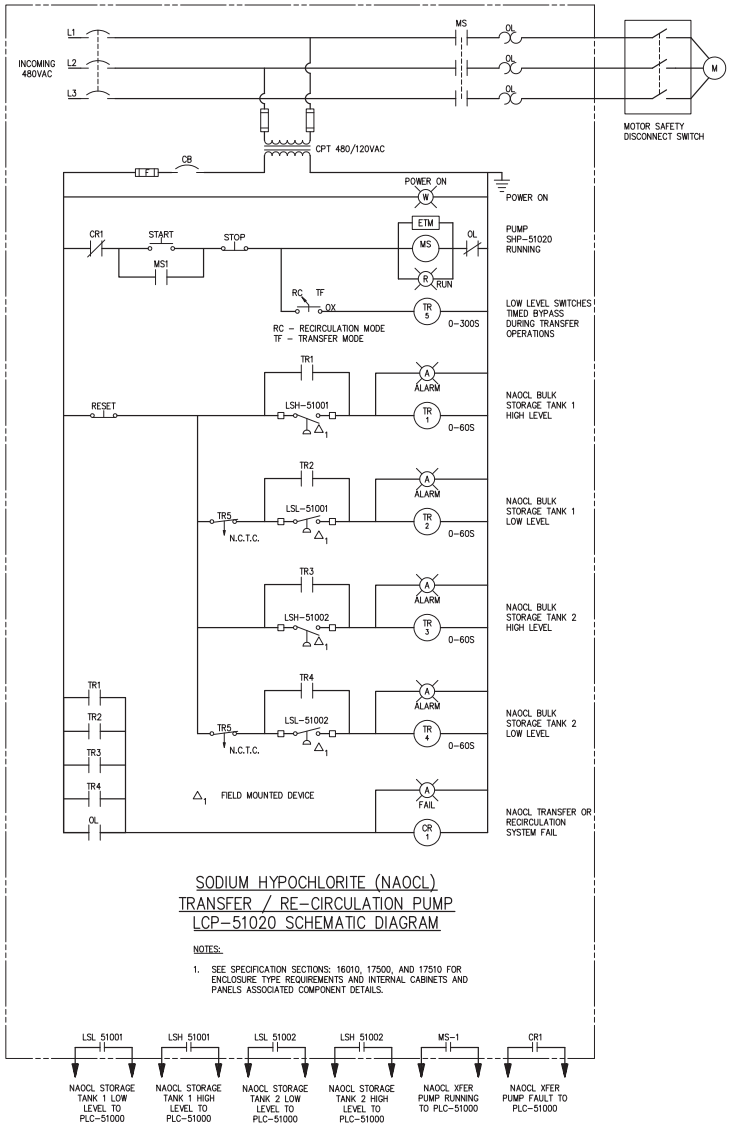

SODIUM HYPOCHLORITE (NAOCL)
TRANSFER / RE-CIRCULATION PUMP
LCP-51020 SCHEMATIC DIAGRAM

NOTES:

1. SEE SPECIFICATION SECTIONS: 16010, 17500, AND 17510 FOR ENCLOSURE TYPE REQUIREMENTS AND INTERNAL CABINETS AND PANELS ASSOCIATED COMPONENT DETAILS.

NO.	DATE	ISSUED FOR	BY

DESIGNED J.M.B.
DRAWN J.M.B.
CHECKED J.C.B.
PROJ. ENGR. J.C.B.

JOHN C. BURKE P.E.
No. 17301

HAZEN AND SAWYER
Environmental Engineers & Scientists
4000 Hollywood Boulevard, Suite 750N
Hollywood, Florida 33021
Certificate of Authorization Number: 2771

SCALE –

CLIENTS PROJECT: –
ENGINEERS PROJECT: 44238-004
CAD REFERENCE: 44238-004BP3-E48

NORTH MIAMI FLORIDA
CITY OF NORTH MIAMI
PUBLIC WORKS UTILITIES

WINSON WATER TREATMENT PLANT
BID PACKAGE 3: WTP REHABILITATION
SCHEMATICS
SHEET 3

DATE: JUNE 2014
SHEET: 287 OF 335
DRAWING: E-48

PERMITTING

PLOT DATE: 6/10/2014 12:51 PM BY: MS
XREFs= ..\Tblock\44238-004-BP3-TB
File = H:\44238-004\Drawings\Bid Package 3 - WTP Rehab\Electrical\44238-004BP3-E48 Saved by HScalf Save date = 6/9/2014 7:33 PM

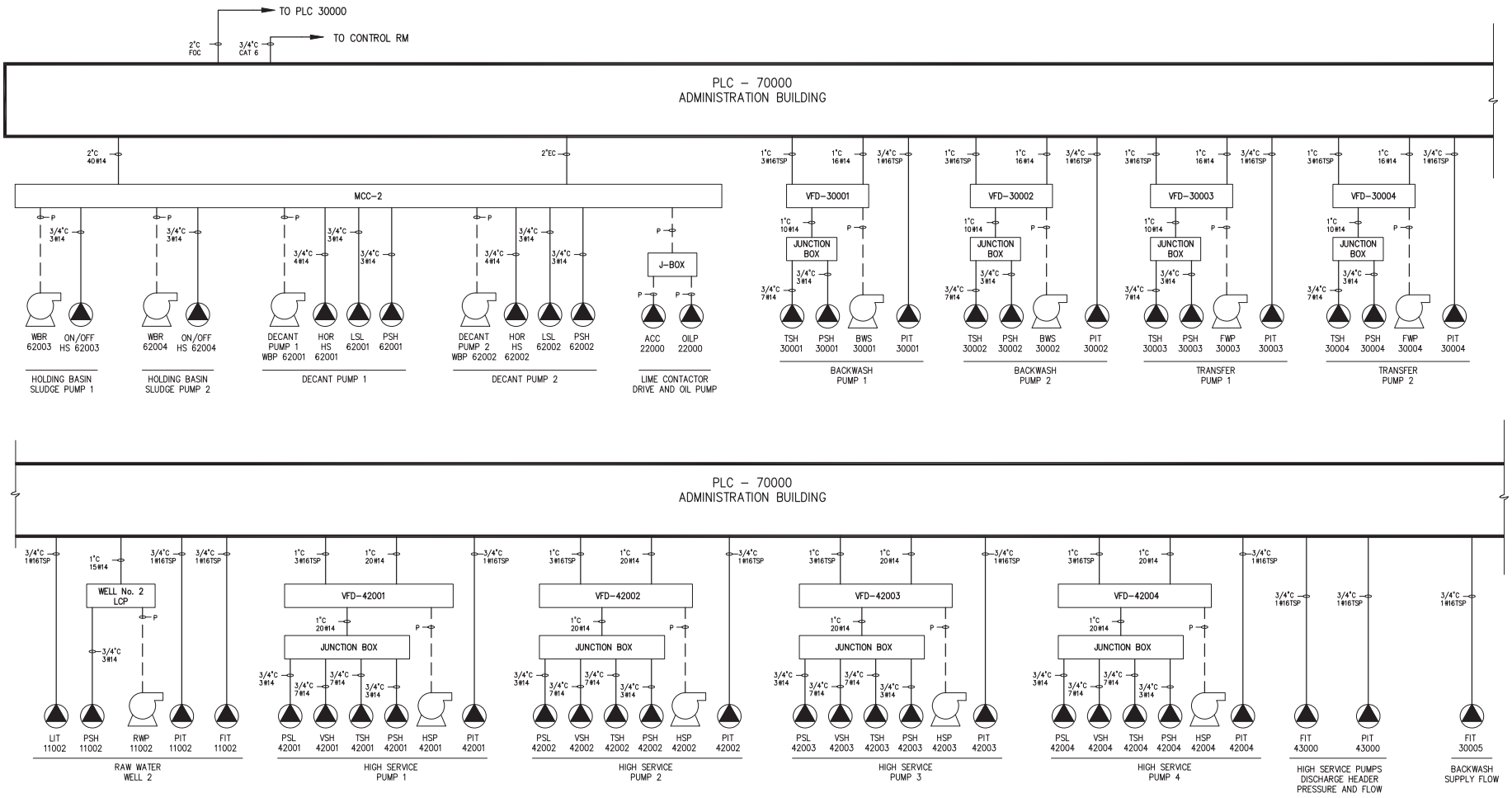

LEGEND:

CAT 6	CATEGORY 6 CABLE
FOC	FIBER OPTIC CABLE
P	AUX POWER AND OR CONTROL WIRING SEE ELECTRICAL SINGLE LINE OR PANEL SCHEDULES

NO.	DATE	ISSUED FOR	BY

DESIGNED J.M.B.
DRAWN L.M.S.
CHECKED J.C.B.
PROJ. ENGR. J.C.B.

JOHN C. BURKE P.E.
No. 17301

HAZEN AND SAWYER
Environmental Engineers & Scientists
4000 Hollywood Boulevard, Suite 750N
Hollywood, Florida 33021
Certificate of Authorization Number: 2771

SCALE NTS

CLIENTS PROJECT: –
ENGINEERS PROJECT: 44238-004
CAD REFERENCE: 44238-004BP3-E49

NORTH MIAMI FLORIDA
CITY OF NORTH MIAMI
PUBLIC WORKS UTILITIES

WINSON WATER TREATMENT PLANT
BID PACKAGE 3: WTP REHABILITATION
ELECTRICAL CONTROL AND SIGNAL RISER DIAGRAMS 1

DATE: JUNE 2014
SHEET: 288 OF 335
DRAWING: E-49

PERMITTING

PLOT DATE: 6/10/2014 12:53 PM BY: HS
XREFs= ..\Tblock\44238-004-BP3-TB
File = H:\44238-004\Drawings\Bid Package 3 - WTP Rehab\Electrical\44238-004BP3-E49 Saved by HScalf Save date = 6/9/2014 7:36 PM

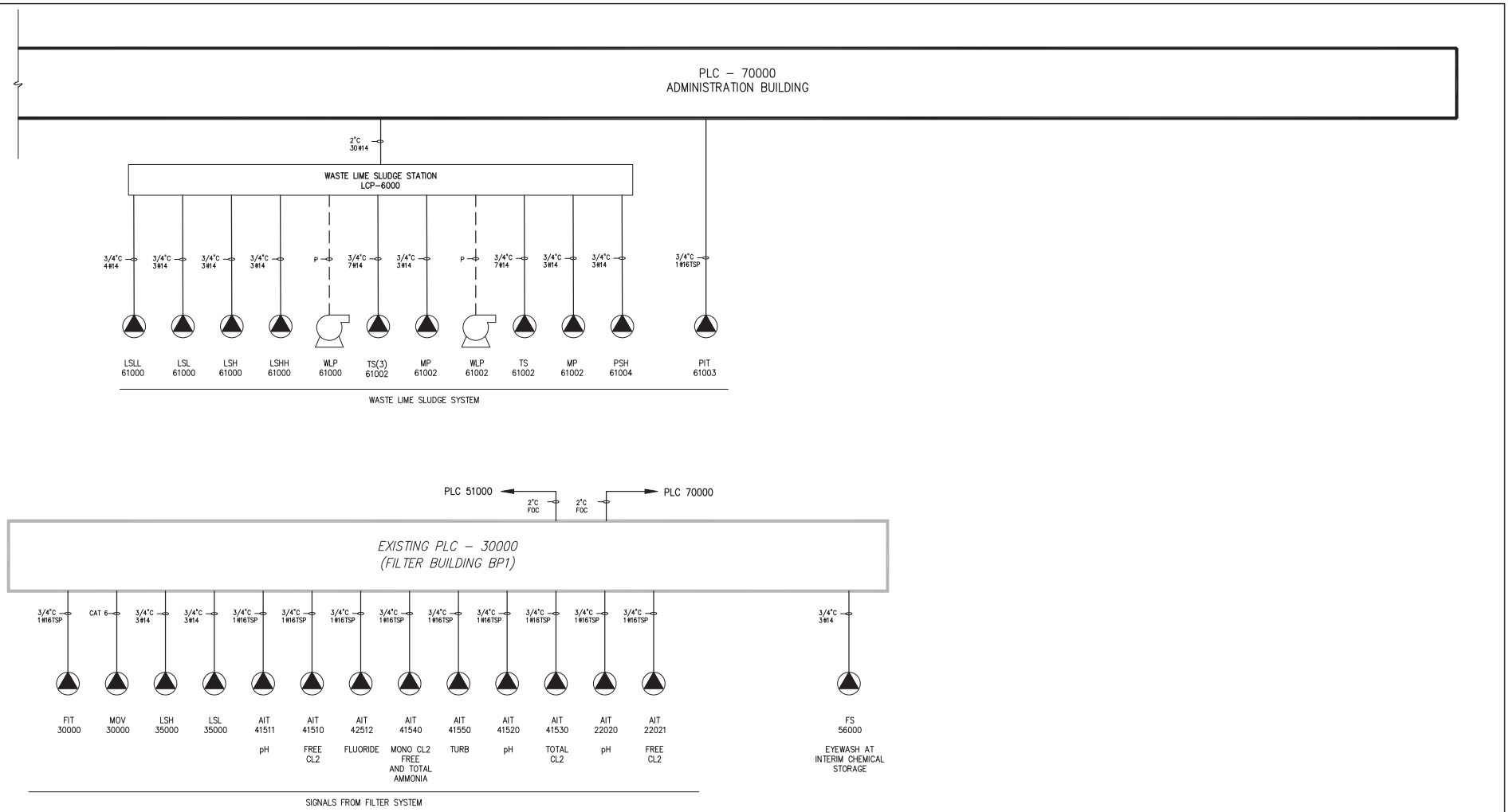

NOTE THAT ONLY NEW SIGNALS TO PLC–30000 ARE SHOWN HERE.
SEE BP–1 DOCUMENTATION FOR EXISTING SIGNALS

LEGEND:

CAT 6	CATEGORY 6 CABLE
FOC	FIBER OPTIC CABLE
P	POWER SEE ELECTRICAL SINGLE LINE OR PANEL SCHEDULES

NO.	DATE	ISSUED FOR	BY

DESIGNED J.M.B.
DRAWN L.M.S.
CHECKED J.C.B.
PROJ. ENGR. J.C.B.

JOHN C. BURKE P.E.
No. 17301

HAZEN AND SAWYER
Environmental Engineers & Scientists
4000 Hollywood Boulevard, Suite 750N
Hollywood, Florida 33021
Certificate of Authorization Number: 2771

SCALE NTS

CLIENTS PROJECT: –
ENGINEERS PROJECT: 44238–004
CAD REFERENCE: 44238–004BP3–E50

NORTH MIAMI FLORIDA
CITY OF NORTH MIAMI
PUBLIC WORKS UTILITIES

WINSON WATER TREATMENT PLANT
BID PACKAGE 3: WTP REHABILITATION
ELECTRICAL CONTROL AND SIGNAL RISER DIAGRAMS 2

DATE: JUNE 2014
SHEET: 289 OF 335
DRAWING: E–50

PERMITTING

PLOT DATE: 6/10/2014 12:54 PM BY: NS
XREFs= ..\Tblock\44238–004–BP3–TB
File = H:\44238–004\Drawings\Bid Package 3 – WTP Rehab\Electrical\44238–004BP3–E50 Saved by HScalf Save date = 6/9/2014 8:59 PM

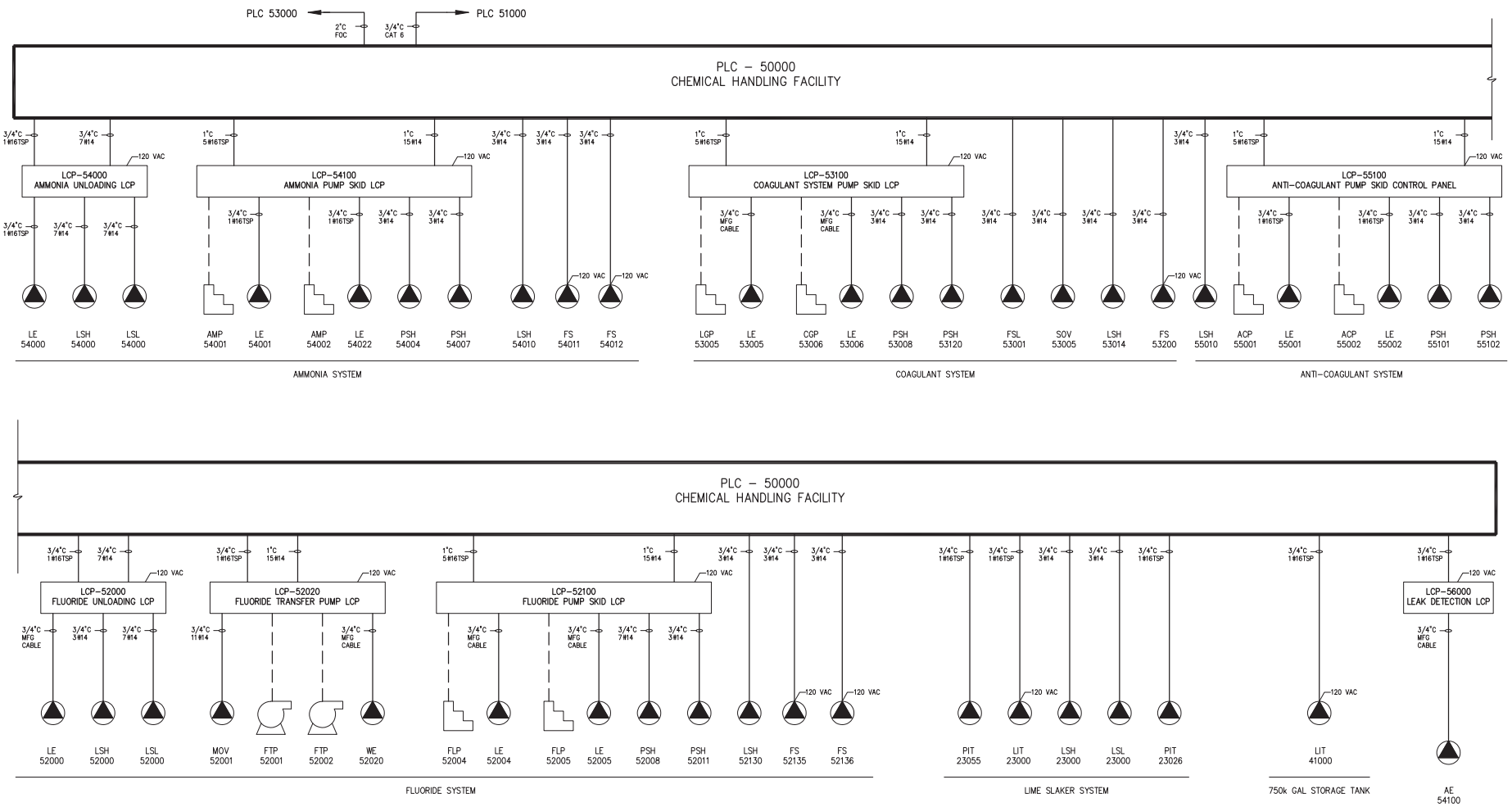

LEGEND:

CAT 6	CATEGORY 6 CABLE
FOC	FIBER OPTIC CABLE
P	POWER SEE ELECTRICAL SINGLE LINE OR PANEL SCHEDULES

NO.	DATE	ISSUED FOR	BY

DESIGNED J.M.B.
DRAWN L.M.S.
CHECKED J.C.B.
PROJ. ENGR. J.C.B.

JOHN C. BURKE P.E.
No. 17301

HAZEN AND SAWYER
Environmental Engineers & Scientists
4000 Hollywood Boulevard, Suite 750N
Hollywood, Florida 33021
Certificate of Authorization Number: 2771

SCALE NTS

CLIENTS PROJECT: –
ENGINEERS PROJECT: 44238-004
CAD REFERENCE: 44238-004BP3-E51

NORTH MIAMI FLORIDA
CITY OF NORTH MIAMI
PUBLIC WORKS UTILITIES

WINSON WATER TREATMENT PLANT
BID PACKAGE 3: WTP REHABILITATION
ELECTRICAL CONTROL AND SIGNAL RISER DIAGRAMS 3

DATE: JUNE 2014
SHEET: 290 OF 335
DRAWING: E-51

PERMITTING

XREFs= ..\Tblock\44238-004-BP3-TB

File = H:\44238-004\Drawings\Bid Package 3 - WTP Rehab\Electrical\44238-004BP3-E51 Saved by HScalf Save date = 6/9/2014 7:33 PM

PLOT DATE: 6/10/2014 12:55 PM BY: HS

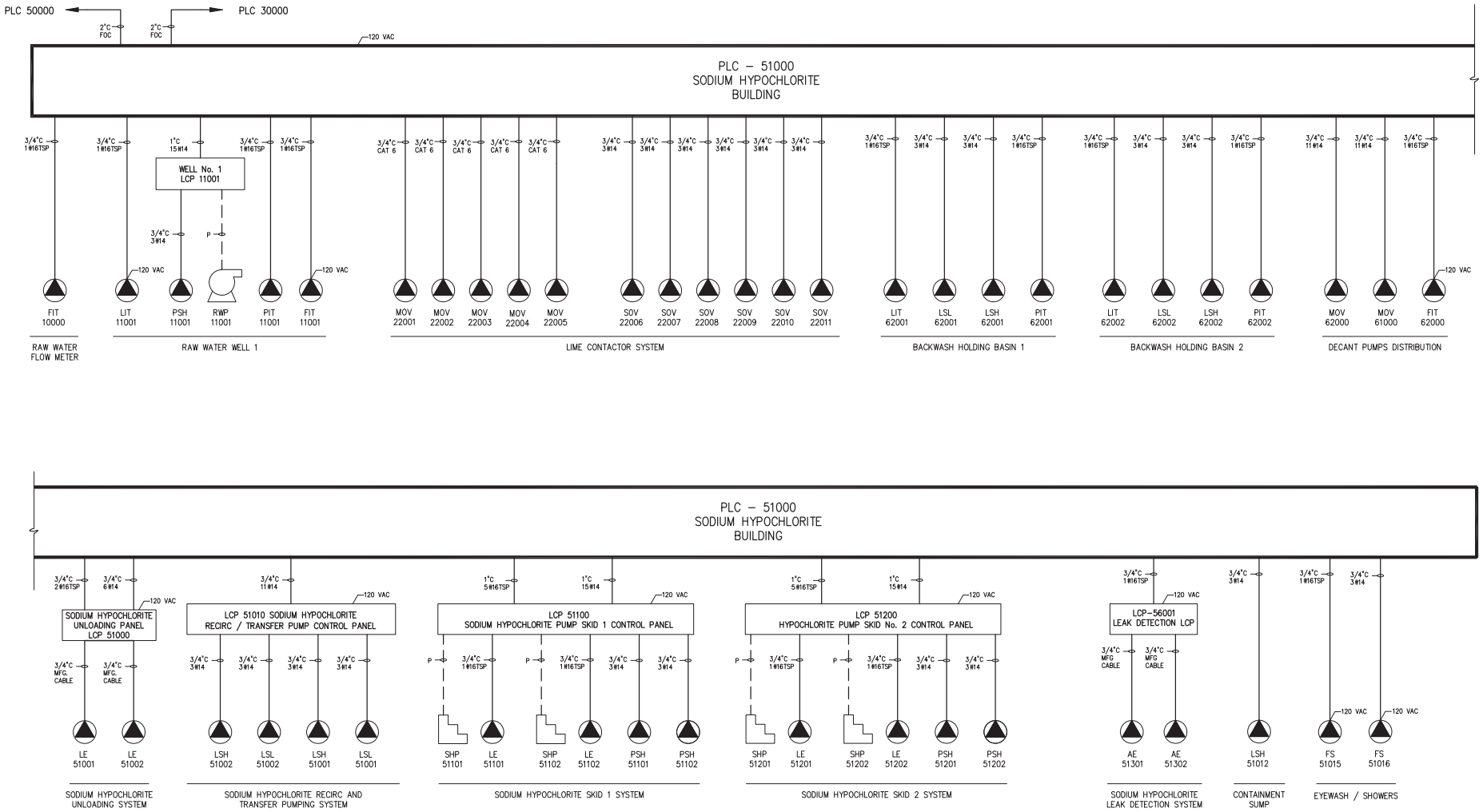

NO.	DATE	ISSUED FOR	BY

DESIGNED J.M.B.
DRAWN L.M.S.
CHECKED J.C.B.
PROJ. ENGR. J.C.B.

JOHN C. BURKE P.E.
No. 17301

HAZEN AND SAWYER
Environmental Engineers & Scientists
4000 Hollywood Boulevard, Suite 750N
Hollywood, Florida 33021
Certificate of Authorization Number: 2771

SCALE NTS

CLIENTS PROJECT: –
ENGINEERS PROJECT: 44238-004
CAD REFERENCE: 44238-004BP3-E52

NORTH MIAMI FLORIDA
CITY OF NORTH MIAMI
PUBLIC WORKS UTILITIES

WINSON WATER TREATMENT PLANT
BID PACKAGE 3: WTP REHABILITATION

ELECTRICAL CONTROL AND SIGNAL RISER DIAGRAMS 4

DATE: JUNE 2014
SHEET: 291 OF 335
DRAWING: E-52

PERMITTING

PLOT DATE: 6/10/2014 12:55 PM BY: IKS
XREFs= ..\Tblock\44238-004-BP3-TB
File = H:\44238-004\Drawings\Bid Package 3 - WTP Rehab\Electrical\44238-004BP3-E52 Saved by HScalll Save date = 6/9/2014 8:15 PM

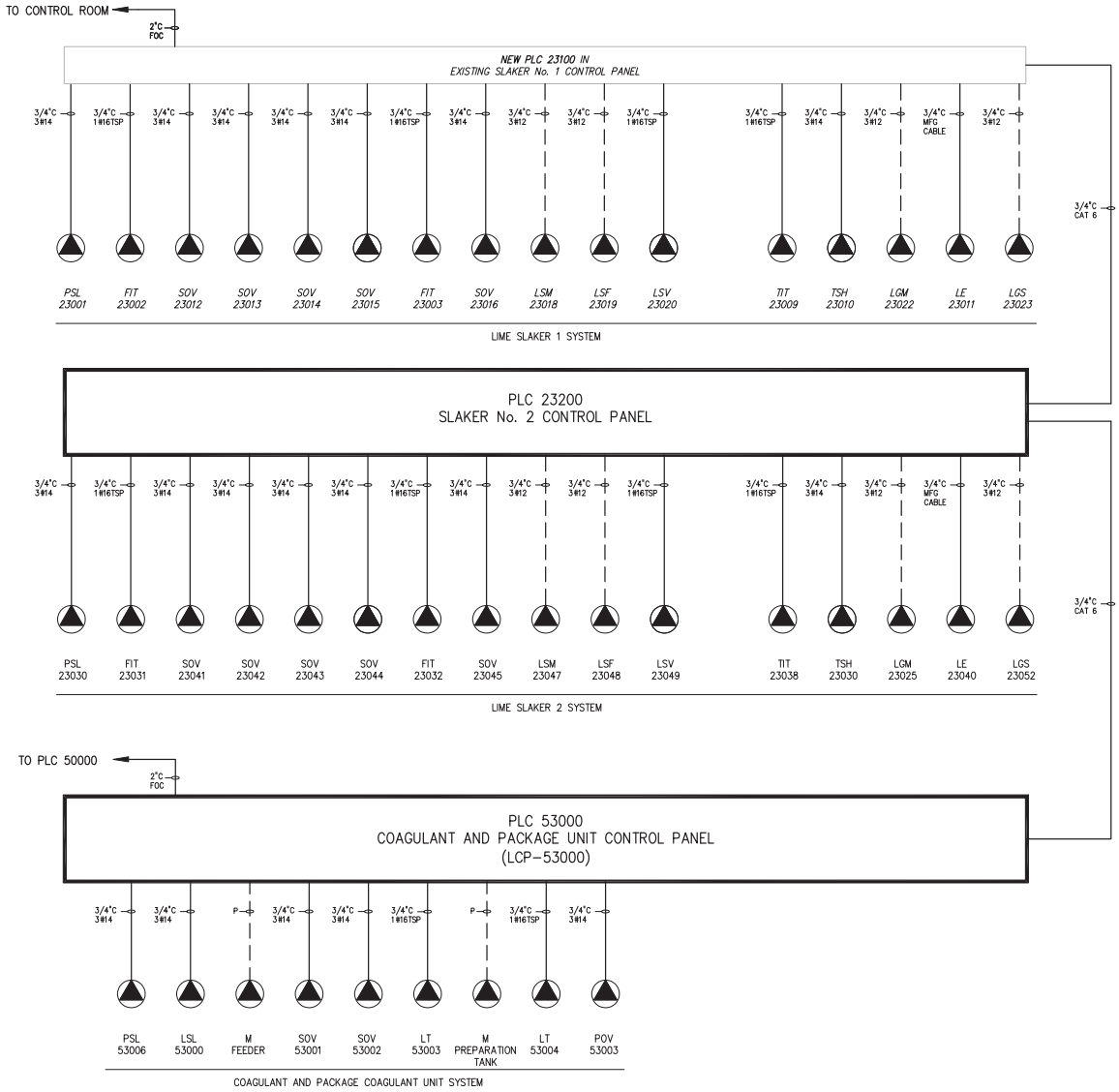

LEGEND:

CAT 6	CATEGORY 6 CABLE
FOC	FIBER OPTIC CABLE
P	POWER SEE ELECTRICAL SINGLE LINE OR PANEL SCHEDULES

NO.	DATE	ISSUED FOR	BY

DESIGNED J.M.B.
DRAWN L.M.S.
CHECKED J.C.B.
PROJ. ENGR. J.C.B.

JOHN C. BURKE P.E.
No. 17301

HAZEN AND SAWYER
Environmental Engineers & Scientists
4000 Hollywood Boulevard, Suite 750N
Hollywood, Florida 33021
Certificate of Authorization Number: 2771

SCALE NTS

CLIENTS PROJECT: –
ENGINEERS PROJECT: 44238-004
CAD REFERENCE: 44238-004BP3-E53

CITY OF NORTH MIAMI
PUBLIC WORKS UTILITIES

WINSON WATER TREATMENT PLANT
BID PACKAGE 3: WTP REHABILITATION
ELECTRICAL CONTROL AND SIGNAL RISER DIAGRAMS 5

DATE: JUNE 2014
SHEET: 292 OF 335
DRAWING: E-53

PERMITTING

PLOT DATE: 6/10/2014 12:56 PM BY: IKS
XREFs= ..\Tblock\44238-004-BP3-TB
File = H:\44238-004\Drawings\Bid Package 3 - WTP Rehab\Electrical\44238-004BP3-E53 Saved by HScalf Save date = 6/9/2014 5:47 PM

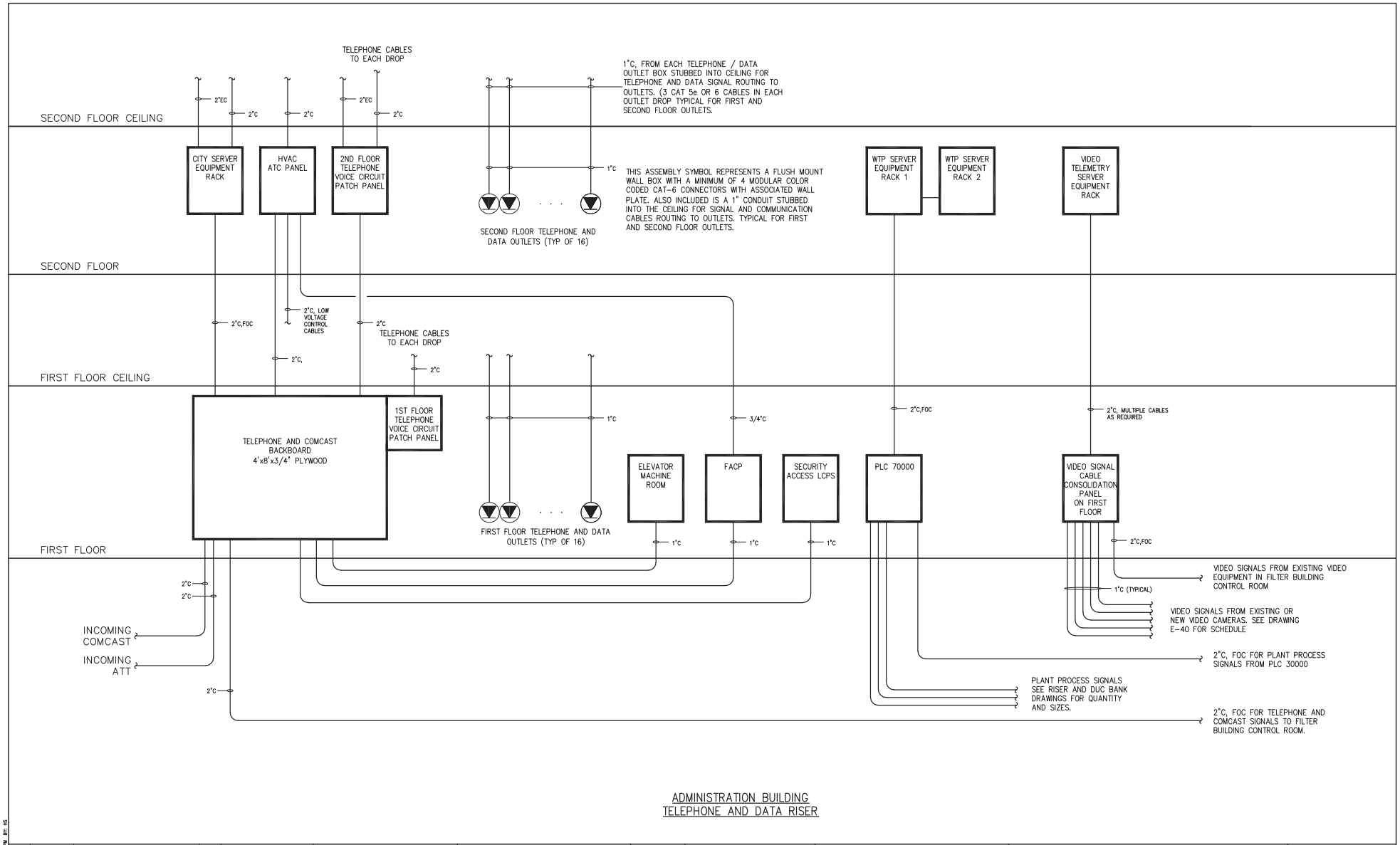

ADMINISTRATION BUILDING
TELEPHONE AND DATA RISER

NO.	DATE	ISSUED FOR	BY

DESIGNED J.M.B.
DRAWN J.M.B.
CHECKED J.C.B.
PROJ. ENGR. J.M.B.

JOHN C. BURKE P.E.
No. 17301

HAZEN AND SAWYER
Environmental Engineers & Scientists
4000 Hollywood Boulevard, Suite 750N
Hollywood, Florida 33021
Certificate of Authorization Number: 2771

SCALE NTS

CLIENTS PROJECT: –
ENGINEERS PROJECT: 44238-004
CAD REFERENCE: 44238-004BP3-E54

NORTH MIAMI FLORIDA
CITY OF NORTH MIAMI
PUBLIC WORKS UTILITIES

WINSON WATER TREATMENT PLANT
BID PACKAGE 3: WTP REHABILITATION
ELECTRICAL CONTROL AN SIGNAL RISER DIAGRAMS 6

DATE: JUNE 2014
SHEET: 293 OF 335
DRAWING: E-54

PERMITTING

PLOT DATE: 6/10/2014 12:57 PM BY: IKS
XREFs= ..\Block\44238-004-BP3-TB
File = H:\44238-004\Drawings\Bid Package 3 - WTP Rehab\Electrical\44238-004BP3-E54 Saved by HScalll Save date = 6/9/2014 7:13 PM

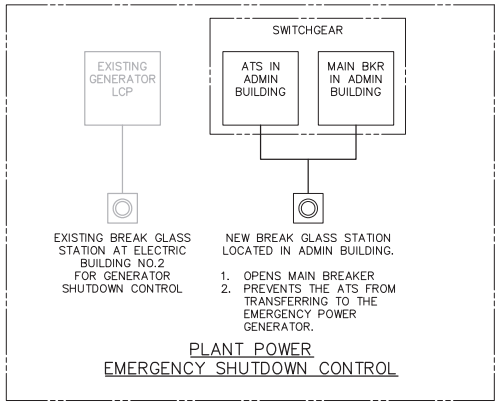

PLANT POWER
EMERGENCY SHUTDOWN CONTROL

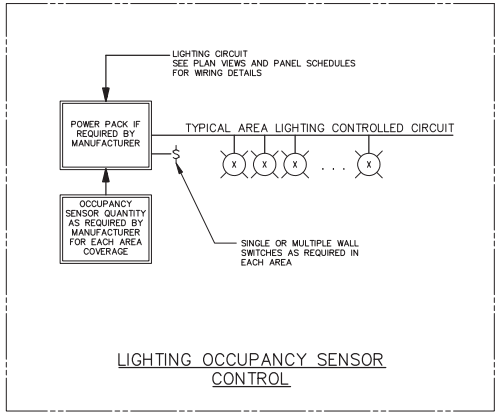

LIGHTING OCCUPANCY SENSOR
CONTROL

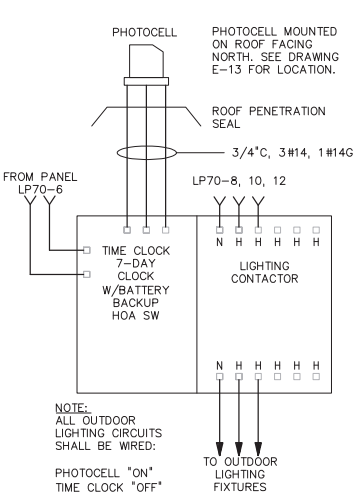

NOTE:
ALL OUTDOOR LIGHTING CIRCUITS SHALL BE WIRED:

PHOTOCELL "ON"
TIME CLOCK "OFF"

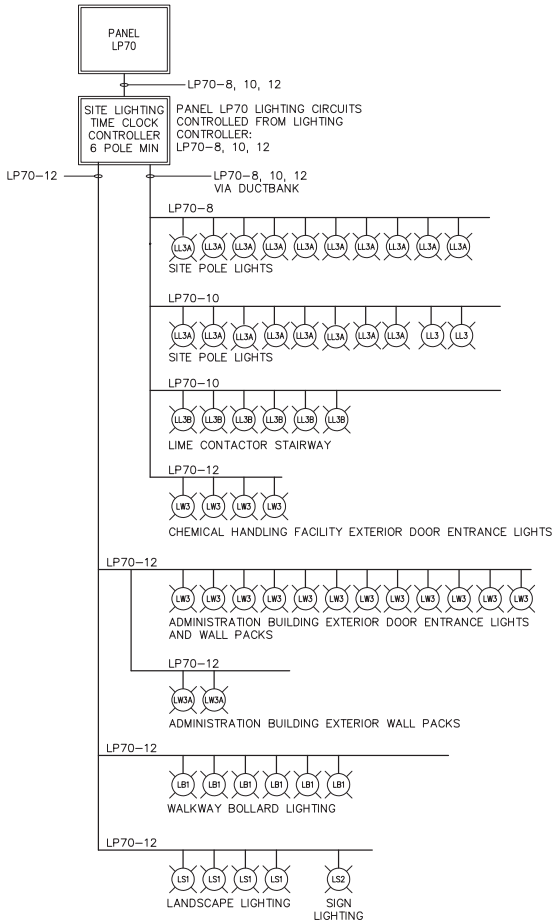

SITE LIGHTING SCHEDULE

CIRCUIT	FIXTURE QTY	WATTS	TOTAL CIR WATTS
LP70-8	10	70	700
LP70-10	16	70	1120
LP70-12	4	34	136
LP70-12	14	34	476
LP70-12	6	38	228
LP70-12	5	50	250
TOTAL			1090

SITE LIGHTING CONTROL

NO.	DATE	ISSUED FOR	BY
1	4-1-14	100% QA COMMENTS	H.J.V.

PLOT DATE: 6/10/2014 12:59 PM BY: HS

XREFs= ..\Tblock\44238-004-BP3-TB

DESIGNED J.M.B.
DRAWN J.M.B.
CHECKED J.C.B.
PROJ. ENGR. J.C.B.

JOHN C. BURKE P.E.
No. 17301

HAZEN AND SAWYER
Environmental Engineers & Scientists
4000 Hollywood Boulevard, Suite 750N
Hollywood, Florida 33021
Certificate of Authorization Number: 2771

SCALE –

CLIENTS PROJECT: –
ENGINEERS PROJECT: 44238-004
CAD REFERENCE: 44238-004BP3-E55

NORTH MIAMI FLORIDA
CITY OF NORTH MIAMI
PUBLIC WORKS UTILITIES

WINSON WATER TREATMENT PLANT
BID PACKAGE 3: WTP REHABILITATION
ELECTRICAL CONTROL AN SIGNAL RISER DIAGRAMS 7

DATE: JUNE 2014
SHEET: 294 OF 335
DRAWING: E-55

PERMITTING

File = H:\44238-004\Drawings\Bid Package 3 - WTP Rehab\Electrical\44238-004BP3-E55 Saved by HScalf Save date = 6/9/2014 5:42 PM

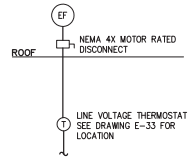

EF-50010 LP8-21 COAGULANT AREA
EF-50020 LP8-23 FLUORIDE AREA
EF-50030 LP8-25 AMMONIA AREA

EXHAUST FANS ELEMENTARY (CHEMICAL HANDLING FACILITY)

CONTRACTOR SHALL PROVIDE AND INSTALL LINE VOLTAGE THERMOSTATS AND DISCONNECT SWITCHES FOR EACH EXHAUST FAN.

MOTOR OPERATED ISOLATION DAMPERS (MIDx) ARE PROVIDED AND INSTALLED BY HVAC CONTRACTOR. CONDUITS SHALL BE PROVIDED AND INSTALLED BY ELECTRICAL CONTRACTOR. THE DAMPERS ARE LOCATED IN THE SECOND FLOOR CEILING.

MOTOR OPERATED ISOLATION DAMPERS

MOTOR OPERATED ISOLATION DAMPER VOLTAGE IS 24V. CONTRACTOR SHALL COORDINATE WIRING REQUIREMENTS WITH HVAC CONTRACTOR.

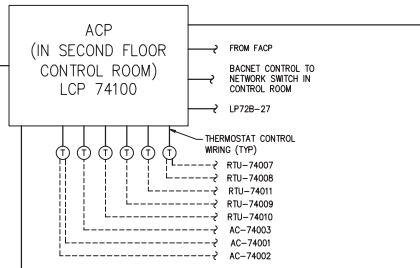

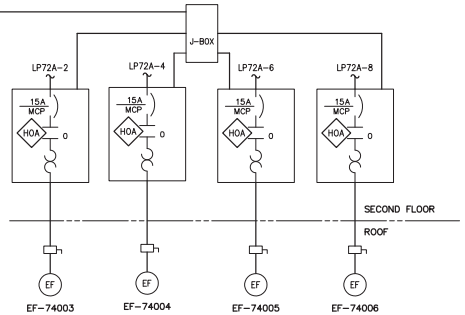

ADMINISTRATION BUILDING ROOF EXHAUST UNITS CONTROL RISER

EXHAUST FAN UNITS

NOTE: THE ATC COORDINATES AND CONTROLS THE RTU UNITS ON THE ROOF WITH THE EXHAUST FANS

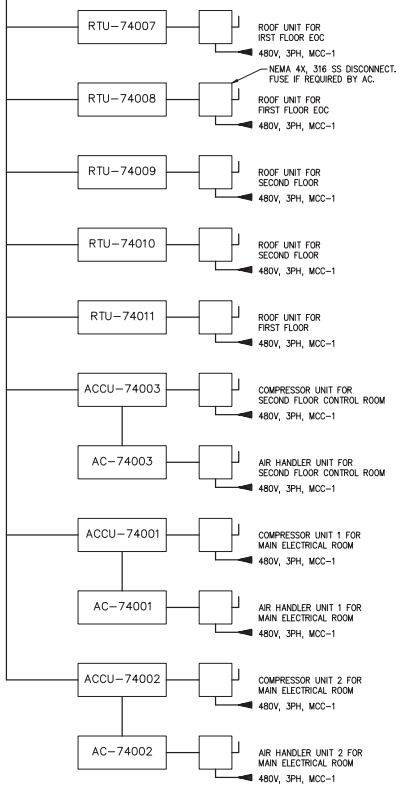

AIR CONDITIONING UNITS CONTROL RISER

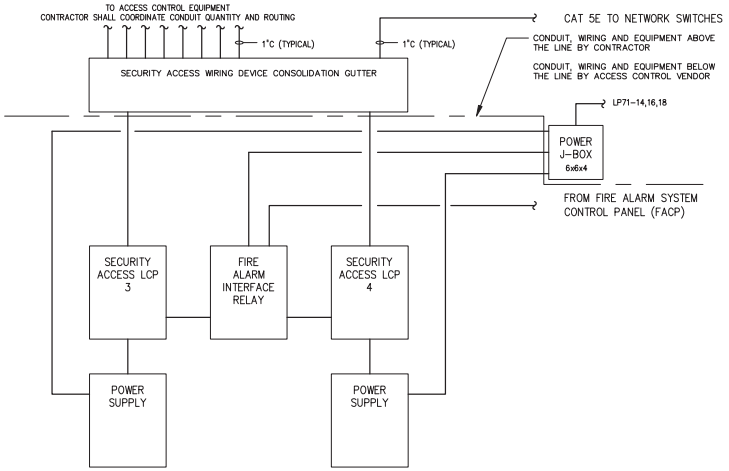

SECURITY ACCESS CONTROL PROPOSED EQUIPMENT LAYOUT

LOCATED IN ADMINISTRATION BUILDING FIRST FLOOR ROOM 108

NOTES:

1. THE ELECTRICAL CONTRACTOR SHALL FURNISH AND INSTALL ALL RACEWAYS FOR HVAC CONTROL AND MONITORING WIRING. WIRING REQUIREMENTS SHALL BE DETERMINED THROUGH COORDINATION BETWEEN ELECTRICAL AND HVAC CONTRACTORS.
2. ELECTRICAL CONTRACTOR SHALL FURNISH AND INSTALL A MINIMUM 200 LB TEST PULL LINE IN EACH EMPTY CONDUIT INSTALLED.
3. HVAC CONTRACTOR SHALL FURNISH AND INSTALL LOW VOLTAGE CONTROL WIRING FOR ADMINISTRATION BUILDING HVAC EQUIPMENT.

NO.	DATE	ISSUED FOR	BY
1	4-1-14	100% QA COMMENTS	H.J.V.

DESIGNED J.M.B.
DRAWN J.M.B.
CHECKED J.C.B.
PROJ. ENGR. J.C.B.

JOHN C. BURKE P.E.
No. 17301

HAZEN AND SAWYER
Environmental Engineers & Scientists
4000 Hollywood Boulevard, Suite 750N
Hollywood, Florida 33021
Certificate of Authorization Number: 2771

SCALE –

CLIENTS PROJECT: –
ENGINEERS PROJECT: 44238-004
CAD REFERENCE: 44238-004BP3-E56

NORTH MIAMI FLORIDA
CITY OF NORTH MIAMI
PUBLIC WORKS UTILITIES

WINSON WATER TREATMENT PLANT
BID PACKAGE 3: WTP REHABILITATION

ELECTRICAL CONTROL AN SIGNAL RISER DIAGRAMS 8

DATE: JUNE 2014
SHEET: 295 OF 335
DRAWING: E-56

PERMITTING

PLOT DATE: 6/10/2014 1:00 PM BY: HS
XREFs= ..\Block\44238-004-BP3-TB
File = H:\44238-004\Drawings\Bid Package 3 - WTP Rehab\Electrical\44238-004BP3-E56 Saved by HScalf Save date = 6/9/2014 7:34 PM

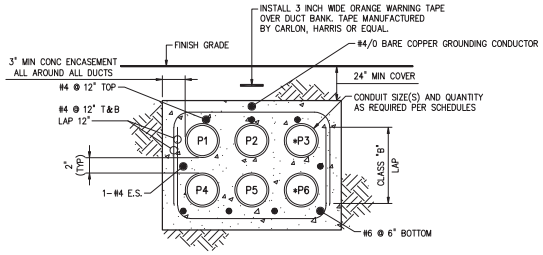

FPL SECONDARY SERVICE

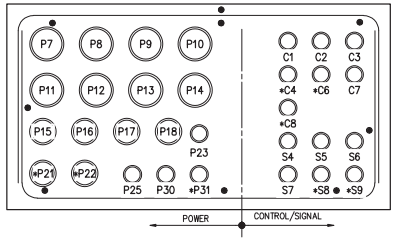

MH-E2 TO MH-E3 MH-C2 TO MH-C3

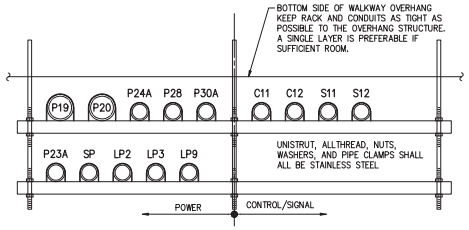

TRAPEZE STYLE CONDUIT RACK UNDER EXISTING FILTER BUILDING WALKWAY OVERHANG

THIS IS AN ALTERNATE IF CONDUITS CAN NOT BE INSTALLED UNDER EXISTING OVERHANG WALKWAY.

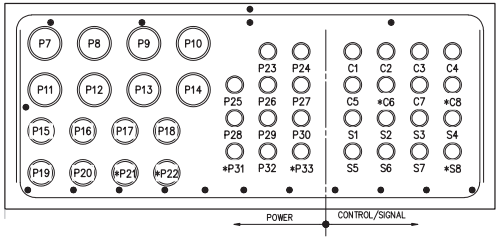

MAIN ELECTRICAL ROOM TO MH-E1 AND MH-C1

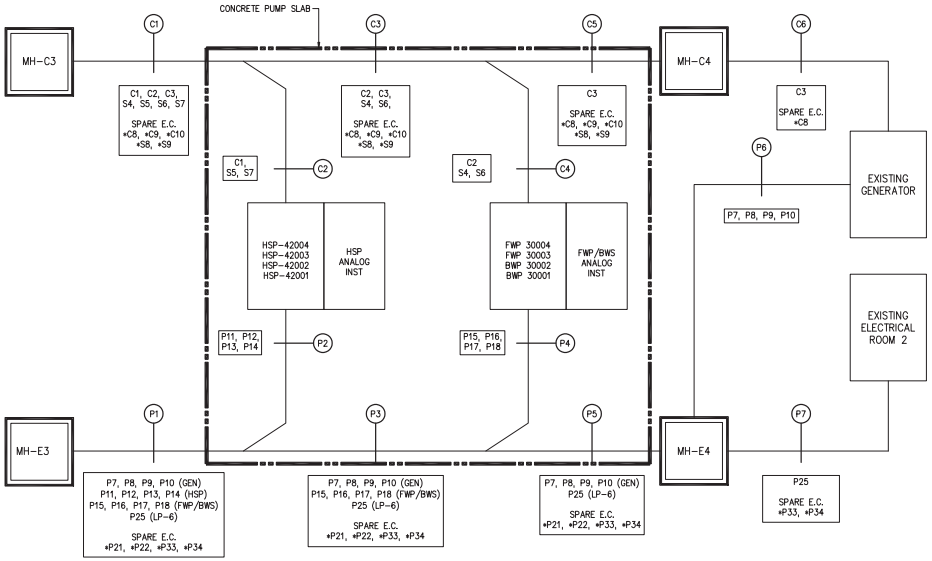

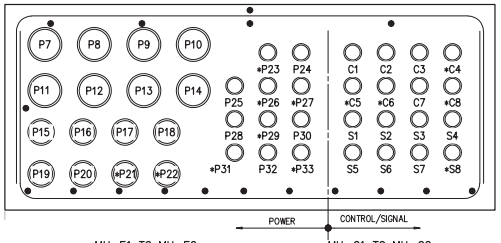

MH-E1 TO MH-E2 MH-C1 TO MH-C2

NOTES:

1. DIMENSIONS SHOWN ARE MINIMUM REQUIREMENTS AND SHALL BE MODIFIED TO SUIT FIELD CONDITIONS.
2. MINIMUM CONCRETE STRENGTH @ 28 DAYS SHALL BE 4,000 PSI.
3. LAP LONGITUDINAL STEEL MIN. 18 INCHES AT SPLICE AND JOINT LOCATIONS.
4. ALL NOTES AND RELATIVE DIMENSIONS INDICATED ON THE "FPL SECONDARY SERVICE" DUCT BANK DETAIL ARE TYPICAL FOR ALL OTHER DUCT BANK DETAILS ON THIS DRAWING.

UNDERGROUND CONDUITS RISER FOR POWER, SIGNAL AND CONTROL DOWNSTREAM OF MANHOLES MH-C3 AND MH-E3

1. CONDUIT RUNS UNDER CONCRETE PUMP SLAB DO NOT REQUIRE CONCRETE ENCASEMENT.
2. DUCT BANK SECTION STYLES ON THIS DRAWING ALSO APPLY TO THIS AREA WHERE CONDUITS ARE NOT UNDER THE PUMP CONCRETE SLAB.

LEGEND:

Px – POWER CONDUIT, ID
Cx – CONTROL CONDUIT, ID
Sx – SIGNAL CONDUIT, ID
*Px– SPARE EMPTY POWER CONDUIT, ID
*Cx– SPARE EMPTY CONTROL CONDUIT, ID
*Sx– SPARE EMPTY SIGNAL CONDUIT, ID
NOTE: ALL EMPTY CONDUITS SHALL HAVE PULL LINES INSTALLED.

SEE DRAWING E-58 FOR CONDUIT SCHEDULES

NO.	DATE	ISSUED FOR	BY
1	4-1-14	100% QA COMMENTS	H.J.V.

DESIGNED J.M.B.
DRAWN H.F.M.
CHECKED J.C.B.
PROJ. ENGR. J.C.B.

JOHN C. BURKE P.E.
No. 17301

HAZEN AND SAWYER
Environmental Engineers & Scientists
4000 Hollywood Boulevard, Suite 750N
Hollywood, Florida 33021
Certificate of Authorization Number: 2771

SCALE NTS

CLIENTS PROJECT: –
ENGINEERS PROJECT: 44238-004
CAD REFERENCE: 44238-004BP3-E57

NORTH MIAMI FLORIDA
CITY OF NORTH MIAMI
PUBLIC WORKS UTILITIES

WINSON WATER TREATMENT PLANT
BID PACKAGE 3: WTP REHABILITATION
DUCT BANK SECTIONS

DATE: JUNE 2014
SHEET: 296 OF 335
DRAWING: E-57

PERMITTING

PLOT DATE: 6/10/2014 1:01 PM BY: HS
XREFs= .\Tblock\44238-004-BP3-TB
File = H:\44238-004\Drawings\Bid Package 3 - WTP Rehab\Electrical\44238-004BP3-E57 Saved by jbrood Save date = 6/9/2014 7:57 PM

POWER CONDUIT AND CABLE SCHEDULE

CONDUIT	SIZE	FROM	TO	CABLE	REMARKS
FPL	5	FPL SERVICE POLE	FPL PAD MOUNT TRANSFORMER	BY FPL	CONDUIT PROVIDED BY FPL AND INSTALLED BY CONTRACTOR
FPL	5	FPL SERVICE POLE	FPL PAD MOUNT TRANSFORMER	BY FPL	FPL SPARE CONDUIT
P1	4" C	FPL PAD MOUNT TRANSFORMER	MAIN ELEC ROOM MAIN SWITCHBOARD	3#600 MCM, 1#3/0 N	
P2	4" C	FPL PAD MOUNT TRANSFORMER	MAIN ELEC ROOM MAIN SWITCHBOARD	3#600 MCM, 1#3/0 N	
P3	4" C	FPL PAD MOUNT TRANSFORMER	MAIN ELEC ROOM MAIN SWITCHBOARD	E.C.	
P4	4" C	FPL PAD MOUNT TRANSFORMER	MAIN ELEC ROOM MAIN SWITCHBOARD	3#600 MCM, 1#3/0 N	
P5	4" C	FPL PAD MOUNT TRANSFORMER	MAIN ELEC ROOM MAIN SWITCHBOARD	3#600 MCM, 1#3/0 N	
P6	4" C	FPL PAD MOUNT TRANSFORMER	MAIN ELEC ROOM MAIN SWITCHBOARD	E.C.	
P7	4" C	MAIN ELEC ROOM ATS	GENERATOR	3#600 MCM, 1#3/0 G	
P8	4" C	MAIN ELEC ROOM ATS	GENERATOR	3#600 MCM, 1#3/0 G	
P9	4" C	MAIN ELEC ROOM ATS	GENERATOR	3#600 MCM, 1#3/0 G	
P10	4" C	MAIN ELEC ROOM ATS	GENERATOR	3#600 MCM, 1#3/0 G	
P11	4" C	MAIN ELEC ROOM – MCC-3	HSP-42001	3#350 MCM, 1#4G 3#12	VFD ARMORED CABLE SEE SECTION 16120
P12	4" C	MAIN ELEC ROOM – MCC-3	HSP-42002	3#350 MCM, 1#4G 3#12	VFD ARMORED CABLE SEE SECTION 16120
P13	4" C	MAIN ELEC ROOM – MCC-3	HSP-42003	3#350 MCM, 1#4G 3#12	VFD ARMORED CABLE SEE SECTION 16120
P14	4" C	MAIN ELEC ROOM – MCC-3	HSP-42004	3#350 MCM, 1#4G 3#12	VFD ARMORED CABLE SEE SECTION 16120
P15	3" C	MAIN ELEC ROOM – MCC-2	BWS-30001	3#3/0, 1#6G 3#12	VFD ARMORED CABLE SEE SECTION 16120
P16	3" C	MAIN ELEC ROOM – MCC-2	BWS-30002	3#3/0, 1#6G 3#12	VFD ARMORED CABLE SEE SECTION 16120
P17	3" C	MAIN ELEC ROOM – MCC-2	FWP-30003	3#2/0, 1#6G 3#12	VFD ARMORED CABLE SEE SECTION 16120
P18	3" C	MAIN ELEC ROOM – MCC-2	FWP-30004	3#2/0, 1#6G 3#12	VFD ARMORED CABLE SEE SECTION 16120
P19	3" C	MAIN ELEC ROOM MAIN SWITCHBOARD	EXISTING PANEL DP1	3#350 MCM, #1G	
P20	3" C	MAIN ELEC ROOM MAIN SWITCHBOARD	EXISTING PANEL DP1	3#350 MCM, #1G	
P21	3" C	MAIN ELEC ROOM	MH-E4	E.C.	
P22	3" C	MAIN ELEC ROOM	MH-E4	E.C.	
P23	2" C	MAIN ELEC ROOM – LP70	SITE LIGHTING	SEE LIGHTING DETAILS	VIA LIGHTING CONTROLLER
P24	2" C	MAIN ELEC ROOM – MCC-2	LIME CONTACTOR ACC-22000, OILP-22000	3#10, 1#12G 3#12, 1#12G	
P25	2" C	MAIN ELEC ROOM – MCC-2	EXISTING PANEL LP-6	3#6, 1#10G	VIA TRANSFORMER TX4 DISC SW.
P26	2" C	MAIN ELEC ROOM – MCC-2	WASTE BASIN DECANT WPB-62001 WASTE BASIN DECANT WPB-62002	3#8, 1#10G 3#8, 1#10G	
P27	2" C	MAIN ELEC ROOM – MCC-2	LCP-60000 WASTE LIME SLUDGE	3#6, 1#10G	
P28	2" C	MAIN ELEC ROOM – MCC-2	RAW WATER WELL NO. 1 LCP-11001	3#6, 1#8G	
P29	2" C	MAIN ELEC ROOM – MCC-2	BACKWASH HOLDING WBR-62003 BACKWASH HOLDING WBR-62004	3#10, 1#12G 3#10, 1#12G	
P30	2" C	MAIN ELEC ROOM – MCC-2	SAMPLE PUMP AIR AIP-22100 SAMPLE PUMP AIR AIP-41500	3#12, 1#12G 3#12, 1#12G	
P31	2" C	MAIN ELEC ROOM	MH-E3	E.C.	
P32	2" C	MAIN ELEC ROOM – LP70	MOG 77200	3#12, 1#12G	
			MOG 77300	3#12, 1#12G	
			MOG 77600	3#12, 1#12G	
P33	2" C	MH-E3	ELECTRICAL BUILDING 2	E.C.	
P34	2" C	MH-E3	ELECTRICAL BUILDING 2	E.C.	

CONTROL / SIGNAL CONDUIT AND CABLE SCHEDULE

CONDUIT	SIZE	FROM	TO	CABLE	REMARKS
C1	2" C	MAIN ELEC ROOM – MCC-3	HSP 42001, HSP 42002 HSP 42003, HSP 42004	12#12, 1#12G PER PUMP	
C2	2" C	MAIN ELEC ROOM – MCC-2	BWS 30001, BWS 30002 FWP 30003, FWP 30004	8#12, 1#12G PER PUMP	
C3	2" C	MAIN ELEC ROOM ATS	GENERATOR	20#12, 1#12G	CONTROL
C4	2" C	ADMIN BLDG ACCESS CONTROL HARDWARE	MOG-77200 S.W. GATE	COORDINATE QUANTITY AND TYPE WITH EQUIPMENT VENDOR	MOTORIZED ACCESS GATES: INCLUDES INTERCOM, CARD READER/CAMERA, GATE OPERATOR COMMAND AND STATUS
C5	2" C	MAIN ELEC ROOM – MCC-2	WBP 62001, WBP 62002 WBR 62003, WBR 62004	5#12, 1#12G PER PUMP 3#12, 1#12G PER PUMP	CONTROL SWITCH HIGH PRESSURE SW
C6	2" C	ADMIN BLDG ACCESS CONTROL HARDWARE	MOG-77300 N.W. GATE	COORDINATE QUANTITY AND TYPE WITH EQUIPMENT VENDOR	MOTORIZED ACCESS GATES: INCLUDES INTERCOM, CARD READER/CAMERA, GATE OPERATOR COMMAND AND STATUS
C7	2" C	ADMIN BLDG ACCESS CONTROL HARDWARE	MOG-77600 N.E. GATE	COORDINATE QUANTITY AND TYPE WITH EQUIPMENT VENDOR	MOTORIZED ACCESS GATES: INCLUDES INTERCOM, CARD READER/CAMERA, GATE OPERATOR COMMAND AND STATUS
C8	2" C	MAIN ELEC ROOM	GENERATOR	E.C.	
C9	2" C	MH-C3	MH-C4	E.C.	
C10	2" C	MH-C3	MH-C4	E.C.	
S1	2" C	ADMIN BUILDING	IN EXISTING FILTER BUILDING CONTROL ROOM	FIBER OPTIC CABLE	PLCS, CAMERAS, TELEPHONES
S2	2" C	ADMIN BUILDING	IN EXISTING FILTER BUILDING CONTROL ROOM	FIBER OPTIC CABLE	PLCS, CAMERAS, TELEPHONES
S3	2" C	ADMIN BUILDING	IN EXISTING FILTER BUILDING CONTROL ROOM	2 CAT 6	TELEPHONES
S4	2" C	PLC-70000	PIT 30001, PIT 30002, PIT 30003, PIT 30004, FIT 30005	10 TSP	
S5	2" C	MCC-3	HSP 42001, HSP 42002 HSP 42003, HSP 42004	10 TSP	
S6	2" C	MCC-2	BWS 30001 BWS 30002 FWP 30003 FWP 30004	10 TSP	
S7	2" C	MAIN ELEC ROOM	PIT 42001, PIT 42002, PIT 42003, PIT 42004, FIT 43000, PIT 43000	10 TSP	
S8	2" C	MAIN ELEC ROOM	MH-C4	E.C.	
S9	2" C	MH-C2	MH-C4	E.C.	
COM1	2" C	PROPERTY LINE TELEPHONE PULL BOX	ATT TELEPHONE SERVICE ACCESS PT.	BY ATT	
COM1	2" C	PROPERTY LINE COMCAST PULL BOX	COMCAST SERVICE ACCESS PT.	BY COMCAST	

FILTER BUILDING WALKWAY CONDUIT AND CABLE SCHEDULE

CONDUIT	SIZE	FROM	TO	CABLE	REMARKS
P19	3"C	MAIN SWBD	EXISTING PANEL DPI	3#350 MCM, 8#1G	
P20	3"C	MAIN SWBD	EXISTING PANEL DPI	3#350 MCM, 8#1G	
P24A	1 1/4"C	MCC-2	LIME CONTACTOR ACC 22000	3#6, 1#10G	
P28	1 1/2"C	MCC-2	RAW WATER WELL NO. 1 LCP	3#3, 1#8G	
P30A	3/4"C	MCC-2	SAMPLE PUMP AIR AIP-22100	3#12, 1#12G	
P23	1"C	LP70 VIA LIGHTING CONTROLLER	SITE LIGHTING	3#10, 1#10G	
S1	2"C	MAIN ELEC RM VIA MH'S 1 & 2	EXISTING CONTROL ROOM	FOC	PLC, CAMERAS, TELEPHONES
S2	2"C	MAIN ELEC RM VIA MH'S 1 & 2	EXISTING CONTROL ROOM	FOC	PLC, CAMERAS, TELEPHONES
S3	2"C	MAIN ELEC RM VIA MH'S 1 & 2	EXISTING CONTROL ROOM	2 CAT 6	TELEPHONES
S11	1"C	FILTER BLDG CTRL ROOM	VID 76020	CAT 5E	
S12	1"C	FILTER BLDG CTRL ROOM	VID 76021	CAT 5E	
C11	2"C	FILTER BLDG CTRL ROOM	MOG-77100 CONTROL WIRING	COORDINATE QUANTITY AND TYPE WITH EQUIPMENT VENDOR	MOTORIZED ACCESS GATES: INCLUDES INTERCOM, CARD READER/CAMERA, GATE OPERATOR COMMAND AND STATUS
C12	2"C	FILTER BLDG CTRL ROOM	MOG-77500 CONTROL WIRING	COORDINATE QUANTITY AND TYPE WITH EQUIPMENT VENDOR	MOTORIZED ACCESS GATES: INCLUDES INTERCOM, CARD READER/CAMERA, GATE OPERATOR COMMAND AND STATUS
LP2	2"C	DISTRIBUTION PANELBOARD DP2	PANEL LP2	2#4, 1#8G	
LP3	3/4"C	DISTRIBUTION PANELBOARD DP2	PANEL LP3	2#10, 1#12G	
LP9	2"C	DISTRIBUTION PANELBOARD DP2	PANEL LP9	3#3/0, 1#6G	

NO.	DATE	ISSUED FOR	BY
1	4-1-14	100% QA COMMENTS	H.J.V.

DESIGNED J.M.B.
DRAWN L.M.S.
CHECKED J.C.B.
PROJ. ENGR. J.C.B.

JOHN C. BURKE P.E.
No. 17301

HAZEN AND SAWYER
Environmental Engineers & Scientists
4000 Hollywood Boulevard, Suite 750N
Hollywood, Florida 33021
Certificate of Authorization Number: 2771

SCALE NTS

CLIENTS PROJECT: –
ENGINEERS PROJECT: 44238-004
CAD REFERENCE: 44238-004BP3-E58

NORTH MIAMI FLORIDA
CITY OF NORTH MIAMI
PUBLIC WORKS UTILITIES

WINSON WATER TREATMENT PLANT
BID PACKAGE 3: WTP REHABILITATION
DUCT BANK SCHEDULES

DATE: JUNE 2014
SHEET: 297 OF 335
DRAWING: E-58

PERMITTING

PLOT DATE: 6/10/2014 1:02 PM BY: HS
XREFs= ..\Tblock\44238-004-BP3-TB
File = H:\44238-004\Drawings\Bid Package 3 - WTP Rehab\Electrical\44238-004BP3-E58 Saved by jbrood Save date = 6/9/2014 7:24 PM

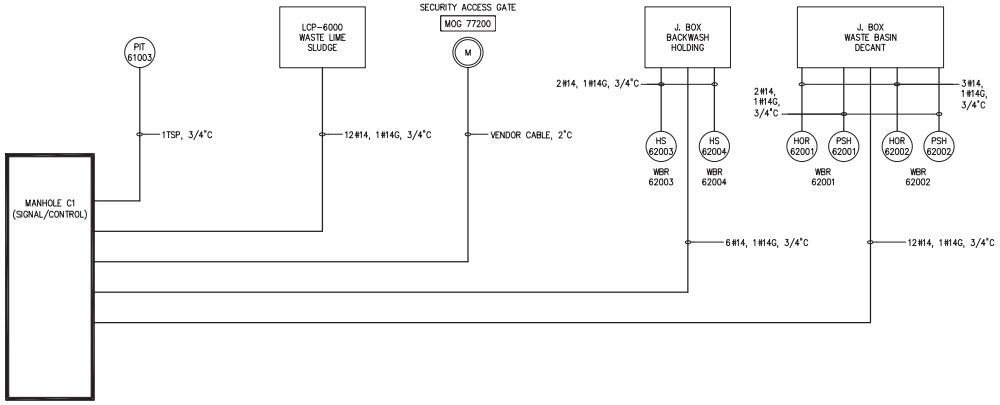

SIGNAL/CONTROL RISER MANHOLE No.C1

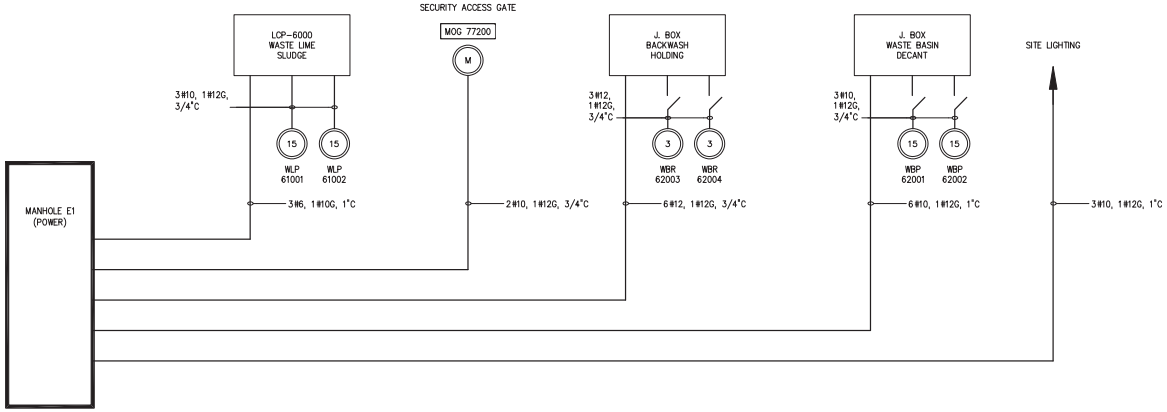

POWER RISER MANHOLE No.E1

NO.	DATE	ISSUED FOR	BY

DESIGNED J.M.B.
DRAWN L.M.S.
CHECKED J.C.B.
PROJ. ENGR. J.C.B.

JOHN C. BURKE P.E.
No. 17301

HAZEN AND SAWYER
Environmental Engineers & Scientists
4000 Hollywood Boulevard, Suite 750N
Hollywood, Florida 33021
Certificate of Authorization Number: 2771

SCALE NTS

CLIENTS PROJECT: –
ENGINEERS PROJECT: 44238-004
CAD REFERENCE: 44238-004BP3-E59

NORTH MIAMI FLORIDA
CITY OF NORTH MIAMI
PUBLIC WORKS UTILITIES

WINSON WATER TREATMENT PLANT
BID PACKAGE 3: WTP REHABILITATION
MANHOLES – E1 AND C1 CONDUIT RISERS

DATE: JUNE 2014
SHEET: 298 OF 335
DRAWING: E-59

PERMITTING

PLOT DATE: 6/10/2014 1:04 PM BY: HS
XREFs= ..\Tblock\44238-004-BP3-TB
File = H:\44238-004\Drawings\Bid Package 3 - WTP Rehab\Electrical\44238-004BP3-E59 Saved by jbrood Save date = 6/9/2014 6:44 PM

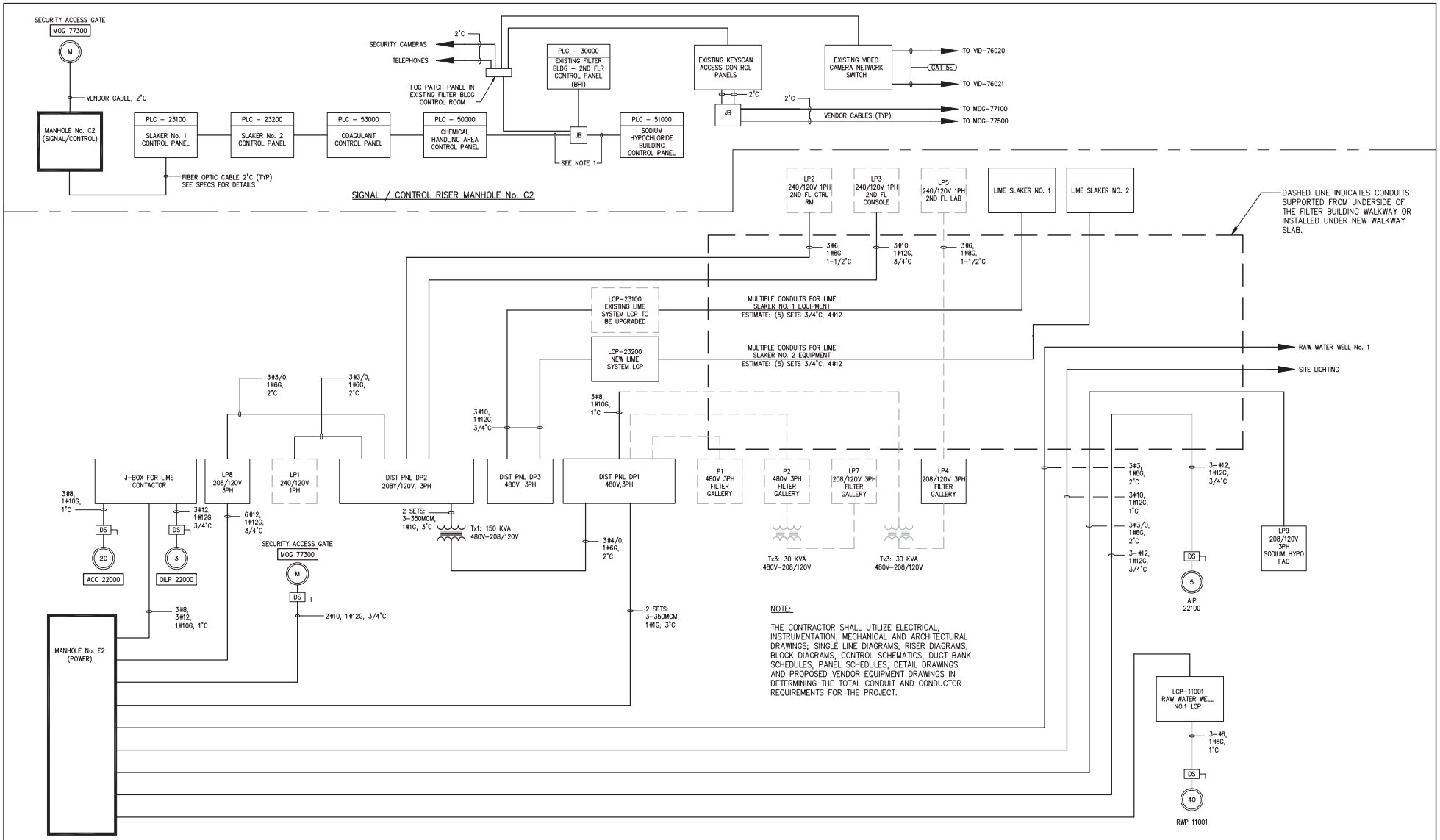

NO.	DATE	ISSUED FOR	BY

DESIGNED J.M.B.
DRAWN L.M.S.
CHECKED J.C.B.
PROJ. ENGR. J.C.B.

JOHN C. BURKE P.E.
No. 17301

HAZEN AND SAWYER
Environmental Engineers & Scientists
4000 Hollywood Boulevard, Suite 750N
Hollywood, Florida 33021
Certificate of Authorization Number: 2771

SCALE: NTS

CLIENTS PROJECT: –
ENGINEERS PROJECT: 44238-004
CAD REFERENCE: 44238-004BP3-E60

NORTH MIAMI FLORIDA
CITY OF NORTH MIAMI
PUBLIC WORKS UTILITIES

WINSON WATER TREATMENT PLANT
BID PACKAGE 3: WTP REHABILITATION
MANHOLES – E2 AND C2 CONDUIT RISERS

DATE: JUNE 2014
SHEET: 299 OF 335
DRAWING: E-60

PERMITTING

PLOT DATE: 6/10/2014 1:06 PM BY: HS
XREFs= ..\Tblock\44238-004-BP3-TB
File = H:\44238-004\Drawings\Bid Package 3 – WTP Rehab\Electrical\44238-004BP3-E60 Saved by jbrood Save date = 6/9/2014 7:52 PM

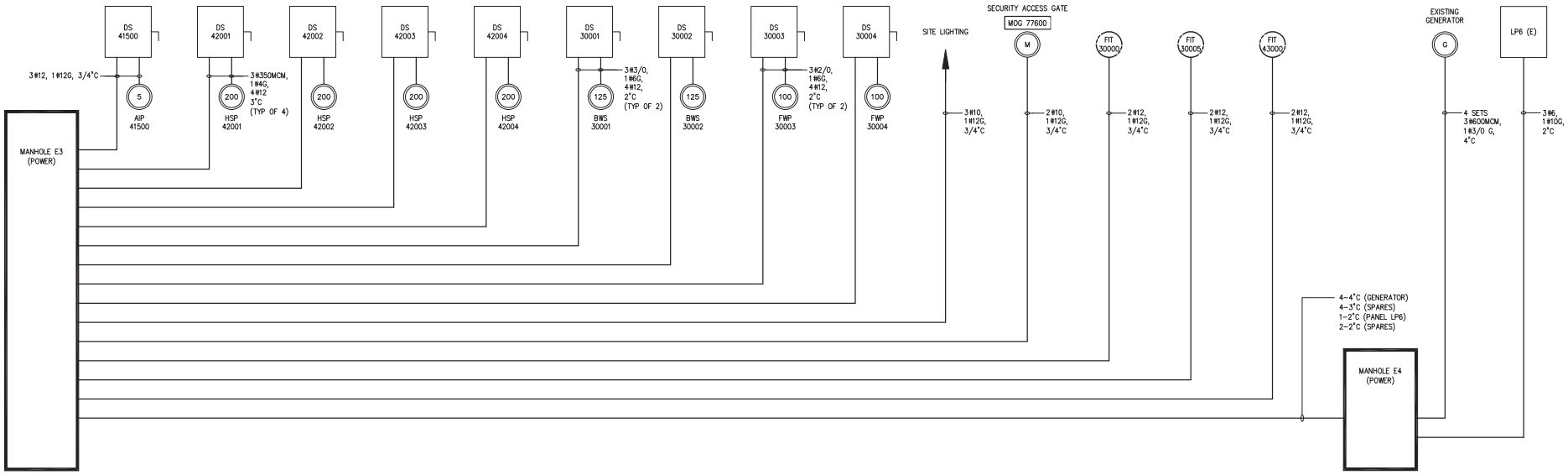

POWER RISER MANHOLES
No.E3 AND E4

NO.	DATE	ISSUED FOR	BY

DESIGNED J.M.B.
DRAWN L.M.S.
CHECKED J.C.B.
PROJ. ENGR. J.C.B.

JOHN C. BURKE P.E.
No. 17301

HAZEN AND SAWYER
Environmental Engineers & Scientists
4000 Hollywood Boulevard, Suite 750N
Hollywood, Florida 33021
Certificate of Authorization Number: 2771

SCALE NTS

CLIENTS PROJECT: –
ENGINEERS PROJECT: 44238-004
CAD REFERENCE: 44238-004BP3-E61

NORTH MIAMI FLORIDA
CITY OF NORTH MIAMI
PUBLIC WORKS UTILITIES

WINSON WATER TREATMENT PLANT
BID PACKAGE 3: WTP REHABILITATION
MANHOLES – E3 AND E4 CONDUIT RISERS

DATE: JUNE 2014
SHEET: 300 OF 335
DRAWING: E-61

PERMITTING

PLOT DATE: 6/10/2014 1:07 PM BY: HS
XREFs= ..\tblock\44238-004-BP3-TB
File = H:\44238-004\Drawings\Bid Package 3 - WTP Rehab\Electrical\44238-004BP3-E61 Saved by jbroad Save date = 6/9/2014 9:16 PM

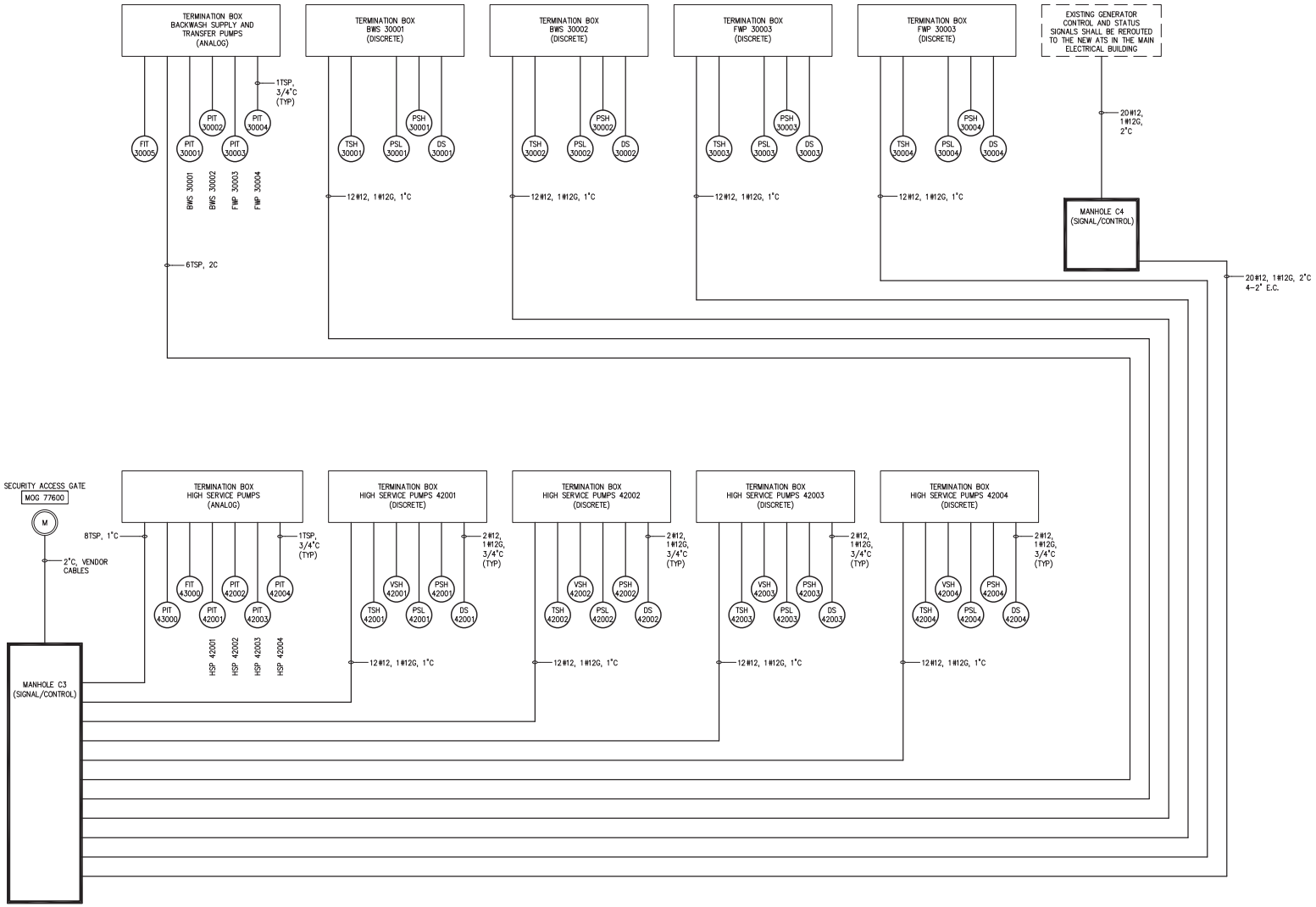

SIGNAL/CONTROL RISER MANHOLE NOs. C3 AND C4

NO.	DATE	ISSUED FOR	BY

DESIGNED J.M.B.
DRAWN L.M.S.
CHECKED J.C.B.
PROJ. ENGR. J.C.B.

JOHN C. BURKE P.E.
No. 17301

HAZEN AND SAWYER
Environmental Engineers & Scientists
4000 Hollywood Boulevard, Suite 750N
Hollywood, Florida 33021
Certificate of Authorization Number: 2771

SCALE NTS

CLIENTS PROJECT: –
ENGINEERS PROJECT: 44238-004
CAD REFERENCE: 44238-004BP3-E62

NORTH MIAMI FLORIDA
CITY OF NORTH MIAMI
PUBLIC WORKS UTILITIES

WINSON WATER TREATMENT PLANT
BID PACKAGE 3: WTP REHABILITATION
MANHOLES – C3 AND C4 CONDUIT RISERS

DATE: JUNE 2014
SHEET: 301 OF 335
DRAWING: E-62

PERMITTING

PLOT DATE: 6/10/2014 1:08 PM BY: HS
XREFs= ..\Tblock\44238-004-BP3-TB
File = H:\44238-004\Drawings\Bid Package 3 - WTP Rehab\Electrical\44238-004BP3-E62 Saved by jbrood Save date = 6/9/2014 9:06 PM

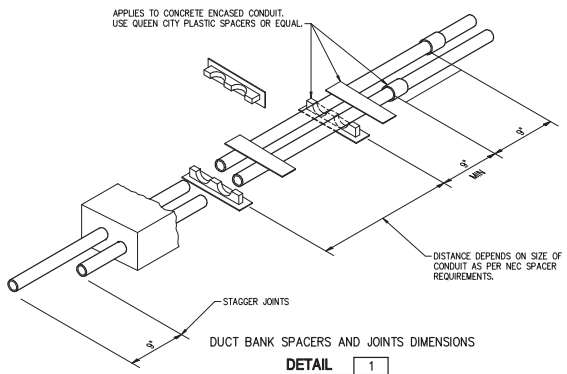

DUCT BANK SPACERS AND JOINTS DIMENSIONS

DETAIL 1
NTS –

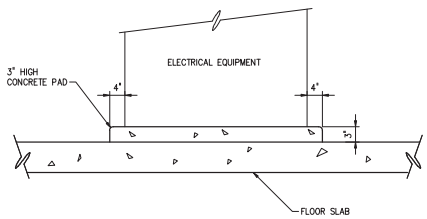

EQUIPMENT HOUSEKEEPING PAD

DETAIL 2
NTS –

NOTE:

DETAIL IS TYPICAL FOR ALL CONDUIT ENTRANCES INTO NEMA 3R, NEMA 4, OR NEMA 4X ENCLOSURES.

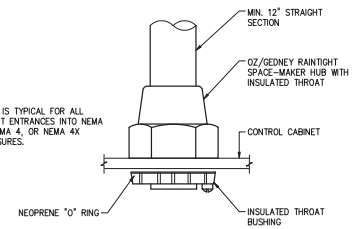

CONDUIT HUB

DETAIL 3
NTS –

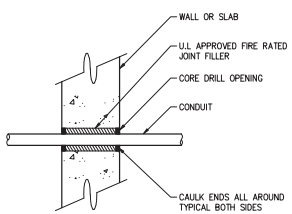

CONDUIT PENETRATION AT WALL OR SLAB

DETAIL 4
NTS –

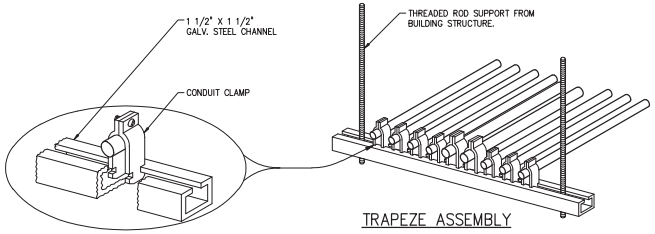

TRAPEZE ASSEMBLY

CONDUIT PIPE STRAP MOUNTING DETAILS

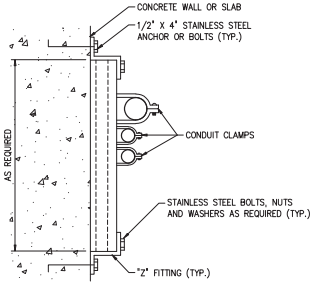

NOTES:

1. THIS DETAIL TYPICAL FOR BOTH VERTICAL AND HORIZONTAL MOUNTING.
2. CHANNEL AND ALL SUPPORT DEVICES TO BE HOT DIP GALVANIZED STEEL. FIELD COAT ALL CUT, ETC. 5" MAXIMUN.
3. CHANNELS TO BE SPACED 5' MAXIMUN.

CONDUIT SUPPORTS

DETAIL 5
NTS –

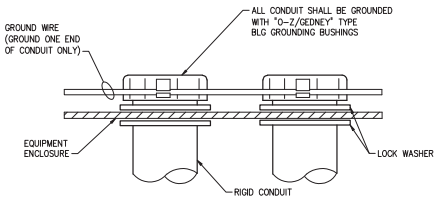

CONDUIT GROUNDING

DETAIL 6
NTS –

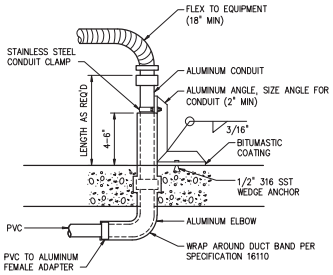

SLAB PENETRATIONS

DETAIL 7
NTS –

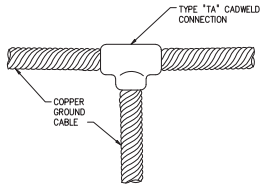

GROUND CABLE CONNECTION

DETAIL 8
NTS –

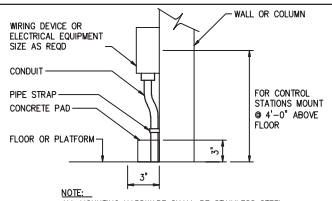

NOTE:
ALL MOUNTING HARDWARE SHALL BE STAINLESS STEEL. ON CONCRETE WALLS, USE MALLEABLE IRON INSERTS, MOUNT ENCLOSURE ON 1/4" SPACERS OF 1/2" RIGID CONDUIT.

WALL OR COLUMN MOUNTED DEVICE

DETAIL 9
NTS –

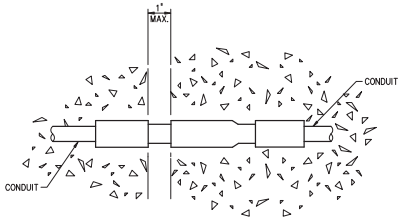

EXPANSION COUPLING

DETAIL 10
NTS –

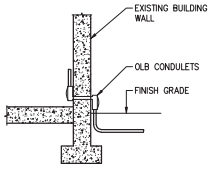

CONDUIT WALL PENETRATION

DETAIL 11
NTS –

NO.	DATE	ISSUED FOR	BY

DESIGNED J.M.B.
DRAWN G.P.B.
CHECKED J.C.B.
PROJ. ENGR. J.C.B.

JOHN C. BURKE P.E.
No. 17301

HAZEN AND SAWYER
Environmental Engineers & Scientists
4000 Hollywood Boulevard, Suite 750N
Hollywood, Florida 33021
Certificate of Authorization Number: 2771

SCALE NTS

CLIENTS PROJECT: –
ENGINEERS PROJECT: 44238-004
CAD REFERENCE: 44238-004BP3-E63

NORTH MIAMI FLORIDA
CITY OF NORTH MIAMI
PUBLIC WORKS UTILITIES

WINSON WATER TREATMENT PLANT
BID PACKAGE 3: WTP REHABILITATION
ELECTRICAL DETAILS
SHEET 1

DATE: JUNE 2014
SHEET: 302 OF 335
DRAWING: E-63

PERMITTING

PLOT DATE: 6/10/2014 1:09 PM BY: HS
XREFs= ..\block\44238-004-BP3-TB
File = H:\44238-004\Drawings\Bid Package 3 - WTP Rehab\Electrical\44238-004BP3-E63 Saved by randersen Save date = 6/9/2014 6:56 PM

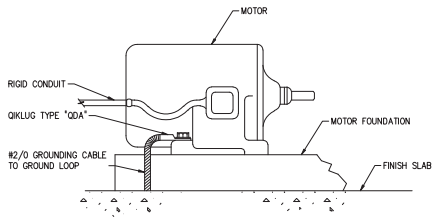

NOTE:

THIS GROUND IS IN ADDITION TO THE GROUND FROM THE MAIN ELECTRICAL SERVICE.

EQUIPMENT GROUNDING

DETAIL 12
NTS –

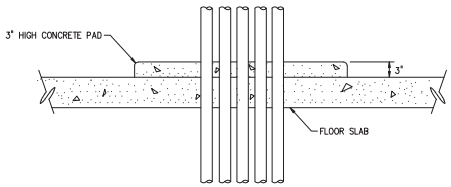

CONDUIT HOUSEKEEPING PAD

DETAIL 13
NTS –

NOT USED

DETAIL 14
NTS –

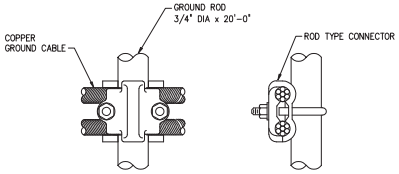

CABLE TO ROD CONNECTION

DETAIL 15
NTS –

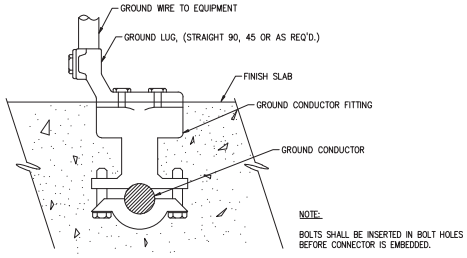

NOTE:

BOLTS SHALL BE INSERTED IN BOLT HOLES BEFORE CONNECTOR IS EMBEDDED.

GROUNDING INSERT

DETAIL 16
NTS –

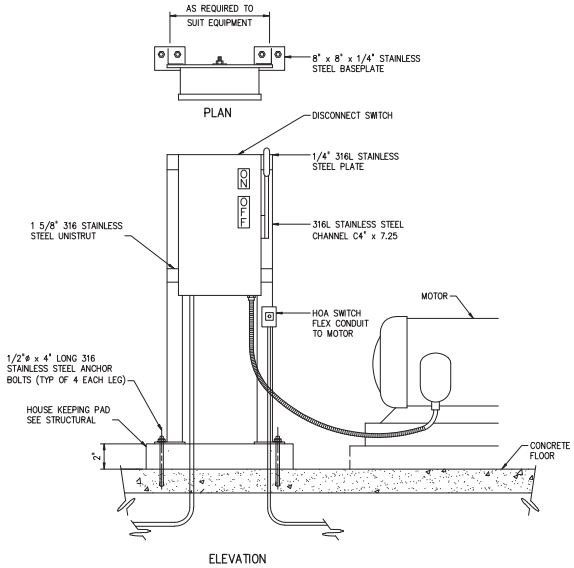

DISCONNECT PEDESTAL

DETAIL 17
NTS –

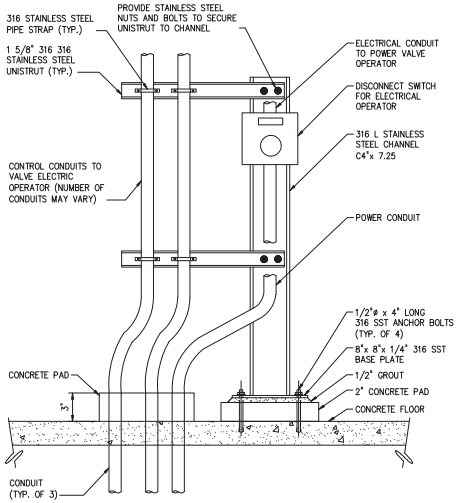

MOTOR OPERATED VALVE DISCONNECT PEDESTAL

DETAIL 18
NTS –

NO.	DATE	ISSUED FOR	BY

DESIGNED J.M.B.
DRAWN G.P.B.
CHECKED J.C.B.
PROJ. ENGR. J.C.B.

JOHN C. BURKE P.E.
No. 17301

HAZEN AND SAWYER
Environmental Engineers & Scientists
4000 Hollywood Boulevard, Suite 750N
Hollywood, Florida 33021
Certificate of Authorization Number: 2771

SCALE NTS

CLIENTS PROJECT: –
ENGINEERS PROJECT: 44238-004
CAD REFERENCE: 44238-004BP3-E64

NORTH MIAMI FLORIDA
CITY OF NORTH MIAMI
PUBLIC WORKS UTILITIES

WINSON WATER TREATMENT PLANT
BID PACKAGE 3: WTP REHABILITATION
ELECTRICAL DETAILS
SHEET 2

DATE: JUNE 2014
SHEET: 303 OF 335
DRAWING: E-64

PERMITTING

PLOT DATE: 6/10/2014 1:11 PM BY: HS
XREFs= ..\Tblock\44238-004-BP3-TB
File = H:\44238-004\Drawings\Bid Package 3 - WTP Rehab\Electrical\44238-004BP3-E64 Saved by jbrood Save date = 6/9/2014 8:26 PM

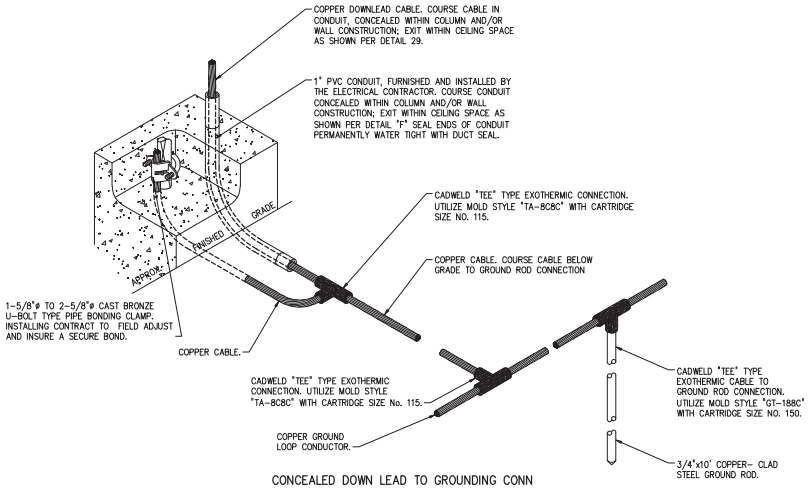

CONCEALED DOWN LEAD TO GROUNDING CONN

DETAIL 19
NTS –

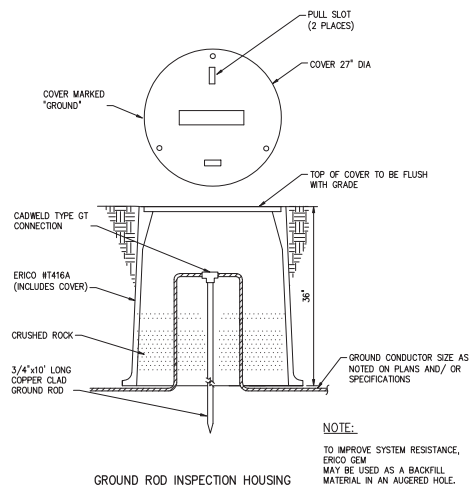

GROUND ROD INSPECTION HOUSING

DETAIL 20
NTS –

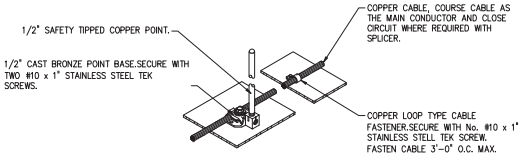

ADHESIVE AIR TERMINAL

DETAIL 22
NTS –

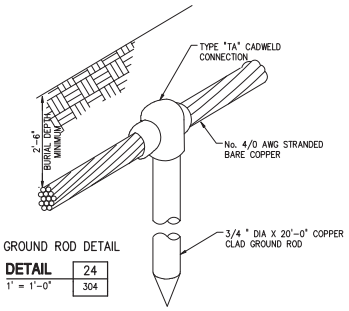

GROUND ROD DETAIL

DETAIL 24
1" = 1'-0" 304

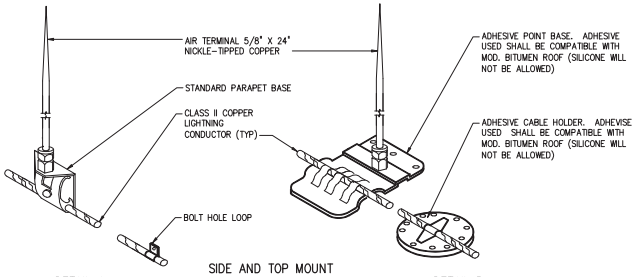

DETAIL A

SIDE AND TOP MOUNT

DETAIL B

DETAIL 23
NTS –

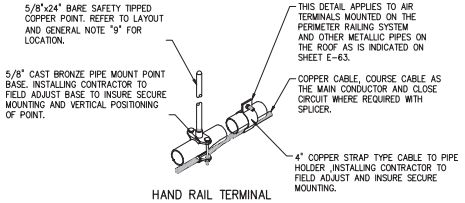

HAND RAIL TERMINAL

DETAIL 21
NTS –

LIGHTNING PROTECTION NOTES

1. THE PLAN AND DETAILS ARE A GUIDE FOR THE DESIGN, FURNISHING, AND INSTALLATION OF LIGHTNING PROTECTION SYSTEM. THE ELECTRICAL CONTRACTOR IS RESPONSIBLE TO PROVIDE A COMPLETE AND FUNCTIONING SYSTEM.
2. THE LIGHTNING PROTECTION SYSTEM AS SHALL BE DESIGNED AND INSTALLED IN ACCORDANCE WITH UL96 & NFPA-780 LIGHTNING PROTECTION SYSTEM STANDARDS.
3. CONDUCTORS SHALL MAINTAIN A HORIZONTAL OR DOWNWARD COURSE, FREE FROM "U" OR "V" (DOWN AND UP) POCKETS.
4. NO BEND OF CONDUCTOR SHALL FORM AN ANGLE OF LESS THAN 90' NOR SHALL HAVE A RADIUS OF BEND LESS THAN 8".
5. AIR TERMINALS SHALL BE SPACED EVERY 20'-0" MAXIMUM AROUND THE ROOF PERIMETER AND/OR ALONG ROOF RIDGES. AIR TERMINALS SHALL BE LOCATED WITHIN 2'-0" OF OUTSIDE CORNERS.
6. AIR TERMINALS SHALL BE SPACED EVERY 50'-0" MAXIMUM IN CENTER ROOF AREAS.
7. ACTUAL JOBSITE CONDITIONS MAY REQUIRE SLIGHT ALTERATIONS IN AIR TERMINAL, DOWN CONDUCTOR AND GROUND ROD LOCATIONS.
8. BARE COPPER MATERIALS SHALL NOT BE INSTALLED ON ALUMINUM OR GALVALUM SURFACES, AND ALUMINUM MATERIALS SHALL NOT BE INSTALLED ON COPPER SURFACES.
9. ALL LIGHTNING PROTECTION CONDUCTORS SHALL BE FASTENED EVERY 3'-0" MAX.
10. ALL BOLTS ON BOLT-PRESSURE CONNECTORS SHALL BE TORQUED AT 150 POUND-INCHES (17N-m).
11. ALL CONNECTIONS MUST BE USED WITH UL LISTED CLASS I OR CLASS II CABLE OF SAME METAL TYPE.
12. BOND TO WATERLINES (DOMESTIC & FIRE).
13. A LIGHTNING ARRESTOR, PROTECTOR OR ANTENNA DISCHARGE UNIT SHALL BE INSTALLED ON EACH ELECTRIC AND TELEPHONE SERVICE AND RADIO AND TELEVISION ANTENNA LEAD-IN BY THE ELECTRICAL CONTRACTOR, IN ACCORDANCE WITH NFPA-70.
14. TRANSIENT VOLTAGE SURGE SUPPRESSION (TVSS) OF SERVICES SHALL BE PROVIDED BY THE ELECTRICAL CONTRACTOR. (I.E. COMPUTERS, COPIERS, TELEPHONE, ETC.).
15. ALL CONNECTIONS MADE IN LIGHTNING PROTECTION SYSTEM SHALL BE ELECTRICALLY CONTINUOUS TO GROUND RODS.
16. ELECTRICAL CONTRACTOR SHALL COORDINATE WITH GENERAL CONTRACTOR FOR LIGHTNING PROTECTION SYSTEM INSTALLATION.
17. CONNECTION TO GROUND ROD OR GROUND LOOP CONDUCTOR SHALL BE MADE AT A POINT NOT LESS THAN 18" BELOW GRADE AND 2'-0" AWAY FROM THE FOUNDATION WALL. GROUND RODS SHALL NOT BE LESS THAN 10' LONG AND 2'-0" AWAY FROM THE FOUNDATION WALL.
18. GROUNDED METAL BODIES LOCATED ABOUT THE STRUCTURE SUCH AS: SOIL PIPE VENTS, ROOF DRAINS, EXHAUST FANS, AIR HANDLER UNITS, ANY MISCELLANEOUS EQUIPMENT WITH ELECTRICAL SERVICES, ETC SHALL BE INTERCONNECTED TO THE LIGHTNING CONDUCTOR SYSTEM, IF WITHIN THE "BONDING DISTANCE" ESTABLISHED BY NFPA #780.
19. METALLIC BODIES OF INDUCTANCE SITUATED WITHIN 6'-0" OF A LIGHTNING CONDUCTOR OR ANOTHER BONDED METAL BODY SHALL BE INTERCONNECTED TO THE LIGHTNING CONDUCTOR SYSTEM, UNLESS INHERENTLY GROUNDED
20. BOND ALL METALLIC PIPES INCLUDING WATER,FIRE,GAS,SEWER,STORM,ETC WHICH ENTER THE STRUCTURE WITHIN 6'-0" OF GRADE, TO THE NEAREST DOWNLEAD,GROUND ROD OR GROUND LOOP.
21. THE LIGHTNING PROTECTION SYSTEM SHALL BE INSTALLED IN A NEAT AND INCONSPICUOUS MANNER SO THAT ALL COMPONENTS WILL BLEND WITH THE APPEARANCE OF THE BUILDING.
22. INSTALLATION:
    - 22.1.1. ALL MOUNTING & PENETRATION OF ROOF SURFACE SHALL BE COORDINATED WITH ROOFING CONTRACTOR TO ASSURE MAXIMUM ROOFING GUARANTEE.
    - 22.1.2. ALL THROUGH-ROOF PENETRATION FLASHINGS TO BE FURNISHED, SEALED AND GUARANTEED BY ROOFING CONTRACTOR
    - 22.1.3. ALL CONDUITS USED TO ROUTE LIGHTNING PROTECTION CABLES SHALL BE 1" MINIMUM SCHEDULE 40 PVC.
23. TELEPHONE AND/OR ELECTRICAL SERVICE ENTRANCE GROUNDS SHALL BE INTERCONNECTED LIGHTNING PROTECTION GROUND BAR.
24. CONDUCTORS SHALL INTERCONNECT ALL AIR TERMINALS AND SHALL FORM A TWO-WAY PATH FROM EACH AIR TERMINAL HORIZONTALLY OR DOWNWARD TO CONNECTIONS WITH GROUND TERMINALS.
25. BARE COPPER LIGHTNING PROTECTION MATERIALS SHALL NOT BE INSTALLED ON ALUMINUM ROOF OR SIDING OR OTHER ALUMINUM SURFACES AND VICE VERSA, ALUMINUM LIGHTING PROTECTION MATERIALS SHALL NOT BE INSTALLED ON COPPER ROOFING OR COPPER SIDING OR OTHER COPPER SURFACES.
26. ALL ADHESIVE TYPE FITTINGS SHALL BE SET IN PLACE WITH AN APPLICATION OF CHEM LINK M-1 STRUCTURAL SEALANT BEFORE ROOF GRAVEL IS APPLIED.
27. SEAL ENDS OF CONDUIT MOISTURE TIGHT WITH PERMANENT DUCT SEALING COMPOUND.
28. ALL REINFORCING, STRUCTURAL, FRAMING AND MISCELLANEOUS STEEL SHALL BE MADE ELECTRICALLY CONTINUOUS THROUGHOUT CONSTRUCTION BY WELDING, CLIPPING, BOLTING OR OTHER APPROVED METHODS.
29. THE DESIGN LAYOUT AND INSTALLATION DETAILS SHOWN HEREON SHALL MEET THE REQUIREMENTS OF UNDERWRITERS' LABORATORIES STANDARD 96A FOR MASTER LABELED LIGHTNING PROTECTION SYSTEMS. THE ACTUAL MASTER LABEL WILL BE DELIVERED UPON COMPLETION OF INSTALLATION.
30. THE LIGHTNING PROTECTION INSTALLATION SHALL COMPLY IN ALL RESPECTS TO LIGHTNING PROTECTION INSTITUTE STANDARD 175. THE INSTALLATION SHALL BE MADE BY OR UNDER THE SUPERVISION OF AN L.P.I. CERTIFIED MASTER INSTALLER. THE COMPLETED INSTALLATION WILL RECEIVE SYSTEM CERTIFICATION SUBMITTAL FORM LPI 176.

NO.	DATE	ISSUED FOR	BY

DESIGNED J.M.B.
DRAWN G.P.B.
CHECKED J.C.B.
PROJ. ENGR. J.C.B.

JOHN C. BURKE P.E.
No. 17301

HAZEN AND SAWYER
Environmental Engineers & Scientists
4000 Hollywood Boulevard, Suite 750N
Hollywood, Florida 33021
Certificate of Authorization Number: 2771

SCALE NTS
CLIENTS PROJECT: –
ENGINEERS PROJECT: 44238-004
CAD REFERENCE: 44238-004BP3-E65

NORTH MIAMI FLORIDA
CITY OF NORTH MIAMI
PUBLIC WORKS UTILITIES

WINSON WATER TREATMENT PLANT
BID PACKAGE 3: WTP REHABILITATION
ELECTRICAL DETAILS
SHEET 3

DATE: JUNE 2014
SHEET: 304 OF 335
DRAWING: E-65

PERMITTING

PLOT DATE: 6/10/2014 5:11 PM BY: HS
XREFs= ..\tblock\44238-004-BP3-TB
File = H:\44238-004\Drawings\Bid Package 3 - WTP Rehab\Electrical\44238-004BP3-E65 Saved by HScaiff Save date = 6/9/2014 7:26 PM

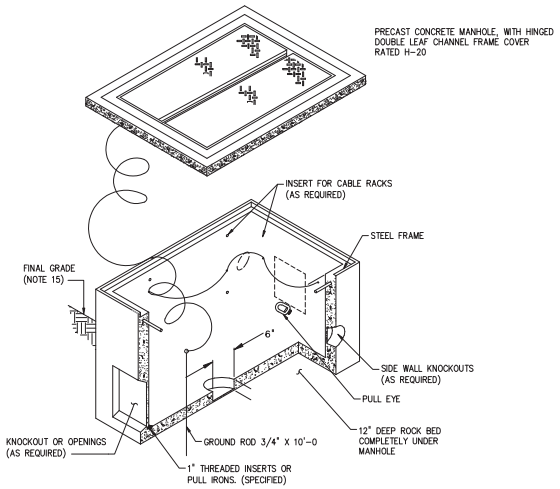

ELECTRIC MANHOLE SCHEDULE

MANHOLE NO.	EXTERIOR		INTERIOR			HATCH				
	LENGTH	WIDTH	LENGTH	WIDTH	DEPTH	TYPE	LENGTH	WIDTH	SERVICE	CUSTOM LETTERING
FPL	7'-4"	7'-4"	6'-0"	6'-0"	NOTE 2	FPL REQ	4'-8"	4'-8"	H-20 PARKING LOT	"FPL"
E1	7'-4"	7'-4"	6'-0"	6'-0"	NOTE 2	DUAL LEAF	4'-8"	4'-8"	H-20 PARKING LOT	"ELECTRIC"
C1	7'-4"	7'-4"	6'-0"	6'-0"	NOTE 2	DUAL LEAF	4'-8"	4'-8"	H-20 PARKING LOT	"SIGNAL"
E2	7'-4"	7'-4"	6'-0"	6'-0"	NOTE 2	DUAL LEAF	4'-8"	4'-8"	H-20 PARKING LOT	"ELECTRIC"
C2	7'-4"	7'-4"	6'-0"	6'-0"	NOTE 2	DUAL LEAF	4'-8"	4'-8"	H-20 PARKING LOT	"SIGNAL"
E3	7'-4"	7'-4"	6'-0"	6'-0"	NOTE 2	DUAL LEAF	4'-8"	4'-8"	H-20 PARKING LOT	"ELECTRIC"
C3	7'-4"	7'-4"	6'-0"	6'-0"	NOTE 2	DUAL LEAF	4'-8"	4'-8"	H-20 PARKING LOT	"SIGNAL"
E4	7'-4"	7'-4"	6'-0"	6'-0"	NOTE 2	DUAL LEAF	4'-8"	4'-8"	H-20 PARKING LOT	"ELECTRIC"

ELECTRIC MANHOLE DETAIL

DETAIL 25
NTS –

NOTES FOR ALL MANHOLES:

1. ALL DIMENSIONS ARE APPROXIMATE.
2. FINAL DEPTH OF ELECTRIC MANHOLES SHALL BE FIELD DETERMINED BY CONTRACTOR TO AVOID CONFLICTS WITH EXISTING AND PROPOSED IMPROVEMENTS.
3. CONTRACTOR SHALL PROVIDE REQUIRED END BELL LOCATIONS TO MANHOLE MANUFACTURER BEFORE MANUFACTURING.
4. ALL MANHOLES SHALL BE H-20-44 TRAFFIC RATED.
5. THE HEIGHT OF CONDUIT ENTRANCES SHALL BE COORDINATED BY THE CONTRACTOR TO ACCOMMODATE OTHER UTILITIES IN THE AREA. SEE CIVIL AND ELECTRICAL SITE PLANS FOR ELEVATIONS REQUIREMENTS.
6. CONTRACTOR SHALL COORDINATE CONDUIT ENTRY REQUIREMENTS WITH SITE PLAN, PRIOR TO ORDERING MANHOLES.
7. CABLE RACK, JOSLYN J-5126 OR EQUAL.
   CABLE HOOKS, JOSLYN J-5131A OR EQUAL.
   CABLE RACK INSULATORS, JOSLYN J-5120.
8. PULLING-IN-IRONS INSTALL OPPOSITE CONDUIT ENTRANCE.
   POSITION BELOW LEVEL OF CONDUIT ENTRANCE.
   HUBBART & CO. CATALOG 9119 OR EQUAL.
9. TERMINATE ALL DUCTS IN MANHOLE WITH END BELLS.
10. MANHOLE COVERS SHALL BE MARKED "ELECTRICAL POWER" OR "ELECTRICAL INSTRUMENTATION" BY THE MANUFACTURER, WITH RAISED LETTERS. THE CONTRACTOR SHALL STAMP IN THE MANHOLE COVERS THE IDENTIFICATION NUMBER OF THE MANHOLE, LETTERS AND NUMBERS SHALL BE 2" HIGH. LETTERS AND NUMBERS TO BE RAISED AND 2" HIGH. SUBMIT ONE SAMPLE NAMEPLATE FOR ENGINEER'S APPROVAL PRIOR TO INSTALLATION.
11. GROUND ROD, 3/4"X20'-0, COPPER CLAD.
12. BOND ALL METALLIC PARTS TO GROUNDING SYSTEM.
13. PRECAST CONCRETE MANHOLE WITH COVER, U.S. PRECAST CORP. OR EQUAL.
14. COVER AND STEEL FRAME SHALL BE GROUNDED.
15. MANHOLES IN PAVED AREAS SHALL BE SET WITH TOP 1-INCH HIGHER THAN FINAL ASPHALT (FEATHER ASPHALT TO MATCH TOP OF MANHOLE). MANHOLES IN SODED AREAS SHALL BE SET 6-INCHES HIGHER THAN FINAL GRADE.

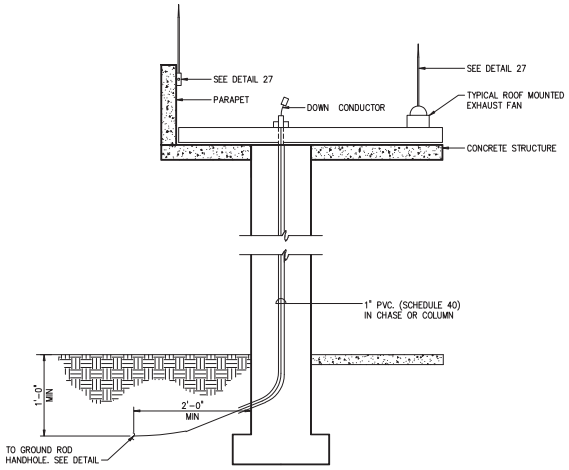

ROOF TO GROUND DOWNLEAD ROUTING

DETAIL 26
NTS –

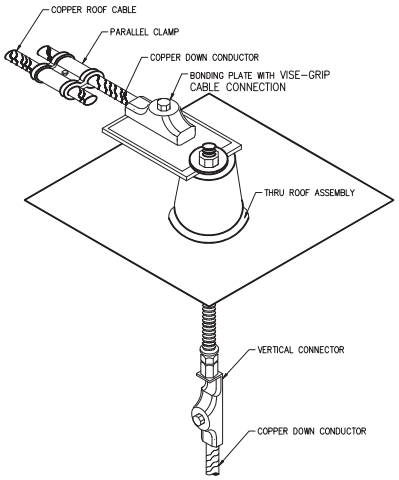

LIGHTNING DOWNLEAD THROUGH ROOF

DETAIL 27
NTS –

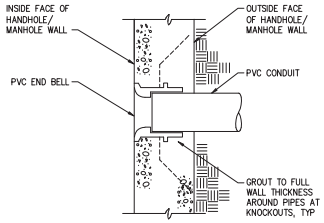

MANHOLE CONDUIT ENTRANCE

DETAIL 28
NTS –

NO.	DATE	ISSUED FOR	BY

DESIGNED J.M.B.
DRAWN G.P.B.
CHECKED J.C.B.
PROJ. ENGR. J.C.B.

JOHN C. BURKE P.E.
No. 17301

HAZEN AND SAWYER
Environmental Engineers & Scientists
4000 Hollywood Boulevard, Suite 750N
Hollywood, Florida 33021
Certificate of Authorization Number: 2771

SCALE NTS

CLIENTS PROJECT: –
ENGINEERS PROJECT: 44238-004
CAD REFERENCE: 44238-004BP3-E66

NORTH MIAMI FLORIDA
CITY OF NORTH MIAMI
PUBLIC WORKS UTILITIES

WINSON WATER TREATMENT PLANT
BID PACKAGE 3: WTP REHABILITATION
ELECTRICAL DETAILS
SHEET 4

DATE: JUNE 2014
SHEET: 305 OF 335
DRAWING: E-66

PERMITTING

PLOT DATE: 6/10/2014 1:14 PM BY: HS
XREFs= ..\block\44238-004-BP3-TB
File = H:\44238-004\Drawings\Bid Package 3 - WTP Rehab\Electrical\44238-004BP3-E66 Saved by HScaff Save date = 6/9/2014 6:27 PM

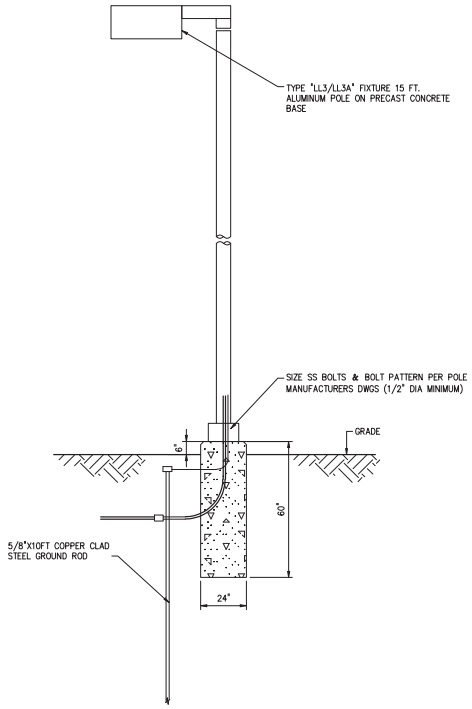

WINDLOADING NOTE:

1. ALL POLE INSTALLATIONS SHALL BE SUITABLE FOR 144 MPH WIND WITH APPROPRIATE GUST FACTOR PER APPLICABLE ZONE OF INSTALLATION AS DEFINED IN THE FLORIDA BUILDING CODE

SITE LIGHTPOLE AND BASE

DETAIL 29
NTS –

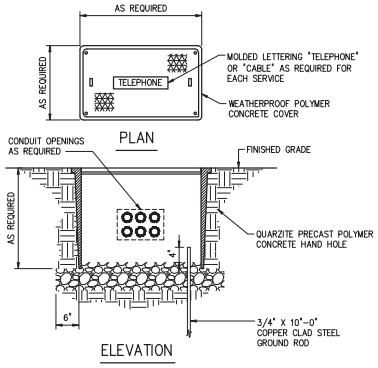

NOTES:

1. ALL HANDHOLES SHALL BE PROVIDED WITH AN OPEN BOTTOM, UNLESS OTHERWISE INDICATED ON PLANS.
2. HANDHOLES 12" X 24" AND LARGER SHALL HAVE FACTORY-INSTALLED INSERTS FOR CABLE RACKS AND PULLING-IN IRONS.

TYPICAL HAND HOLE DETAIL

DETAIL 30
NTS E-04

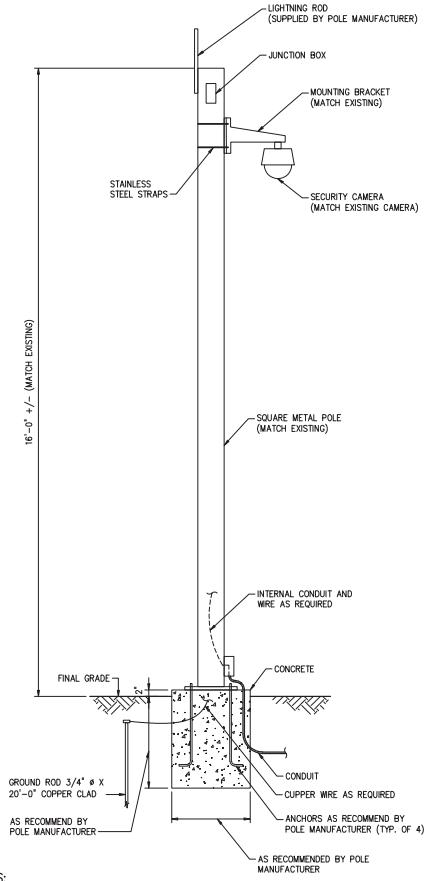

GENERAL NOTES:

1. FURNISH AND INSTALL POLES WITH ALL NEEDED INTERNAL WIRING, TRANSFORMERS, SURGE PROTECTION, TERMINAL STRIPS, ETC. AS NECESSARY FOR A COMPLETE AND OPERABLE SYSTEM.
2. ALL POLES SHALL BE SUITABLE FOR 144 MPH NOMINAL WIND SPEED WITH APPROPRIATE GUST FACTOR PER APPLICABLE ZONE OF INSTALLATION AS DEFINED IN THE FLORIDA BUILDING CODE.

DETAIL 31
NTS –

NO.	DATE	ISSUED FOR	BY

DESIGNED J.M.B.
DRAWN G.P.B.
CHECKED J.C.B.
PROJ. ENGR. J.C.B.

JOHN C. BURKE P.E.
No. 17301

HAZEN AND SAWYER
Environmental Engineers & Scientists
4000 Hollywood Boulevard, Suite 750N
Hollywood, Florida 33021
Certificate of Authorization Number: 2771

SCALE NTS

CLIENTS PROJECT: –
ENGINEERS PROJECT: 44238-004
CAD REFERENCE: 44238-004BP3-E67

CITY OF NORTH MIAMI
PUBLIC WORKS UTILITIES

WINSON WATER TREATMENT PLANT
BID PACKAGE 3: WTP REHABILITATION
ELECTRICAL DETAILS
SHEET 5

DATE: JUNE 2014
SHEET: 306 OF 335
DRAWING: E-67

PERMITTING

PLOT DATE: 6/10/2014 1:16 PM BY: HS
XREFs= ..\tblock\44238-004-BP3-TB
File = H:\44238-004\Drawings\Bid Package 3 - WTP Rehab\Electrical\44238-004BP3-E67 Saved by randersen Save date = 6/9/2014 5:45 PM

NOTE:
ADHESIVE COMPOUND SHALL BE PROVIDED BY OTHERS. ELEC. CONTR. SHALL COORDINATE. THE ADHESIVE

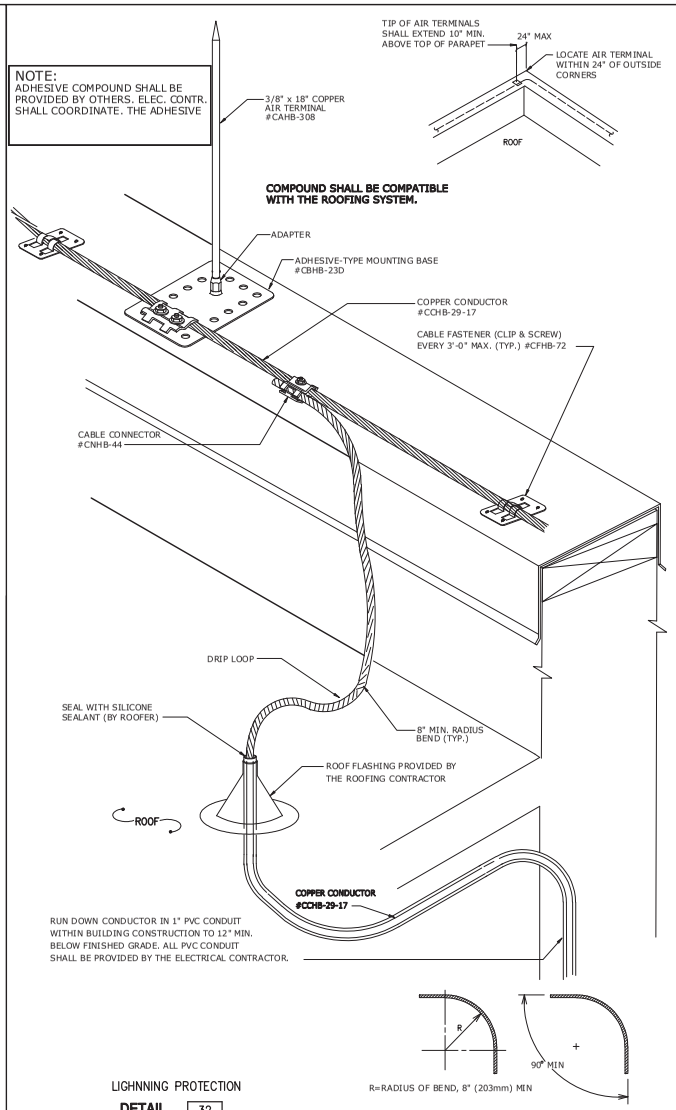

LIGHNNING PROTECTION

DETAIL 32
NTS –

LP CONDUCTOR SHALL REMAIN IN A HORIZONTAL OR DOWNWARD PATH AVOIDING "U" & "V" POCKETS (DOWN & UP). NO BEND OF A CONDUCTOR SHALL FORM AN INCLUDED ANGLE OF LESS THAN 90° OR HAVE A RADIUS OF BEND LESS THAN 8".

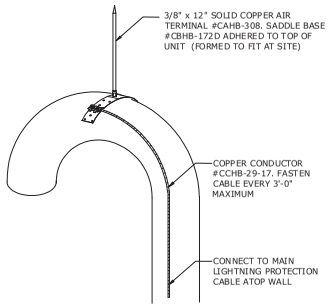

NOTE:
LIGHTNING PROTECTION COMPONENT MATERIALS SHALL BE GALVANICALLY COMPATIBLE WITH METAL BODIES. THE ELECTRICAL ENGINEER AND INSTALLING CONTRACTOR MUST VERIFY.

AIR TERMINAL AT GOOSENECK

DETAIL 33
NTS –

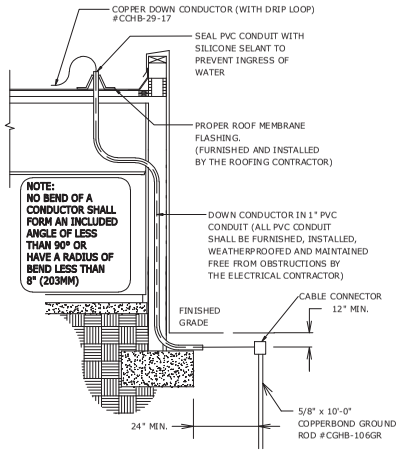

LIGHTNING PROTECTION DOWN CONDUCTOR AND GROUNDING

DETAIL 34
NTS –

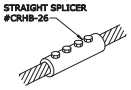

STRAIGHT SPLICER

DETAIL 35
NTS –

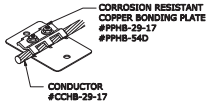

BONDING PLATE

DETAIL 36
NTS –

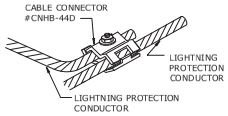

CABLE CONNECTOR

DETAIL 37
NTS –

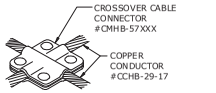

CROSSOVER CABLE CONNECTOR

DETAIL 38
NTS –

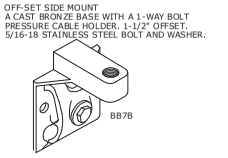

OFFSET SIDE MOUNT BASE

DETAIL 39
NTS –

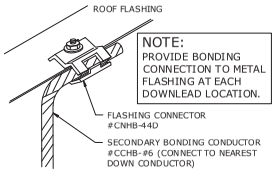

FLASHING CONNECTOR

DETAIL 40
NTS –

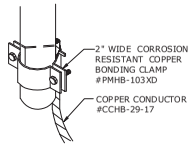

PIPE CLAMP – (RAILINGS ATTENNAS ETC)

DETAIL 41
NTS –

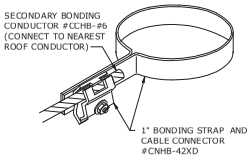

BONDING STRAP AT VENT PIPES

DETAIL 42
NTS –

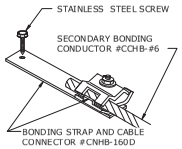

BONDING LUG (ROOF DRAINS)

DETAIL 43
NTS –

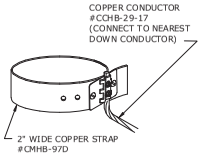

WATERLINE BONDING STRAP

DETAIL 44
NTS –

NO.	DATE	ISSUED FOR	BY

DESIGNED J.M.B.
DRAWN G.P.B.
CHECKED J.C.B.
PROJ. ENGR. J.C.B.

JOHN C. BURKE P.E.
No. 17301

HAZEN AND SAWYER
Environmental Engineers & Scientists
4000 Hollywood Boulevard, Suite 750N
Hollywood, Florida 33021
Certificate of Authorization Number: 2771

SCALE NTS

CLIENTS PROJECT: –
ENGINEERS PROJECT: 44238-004
CAD REFERENCE: 44238-004BP3-E68

NORTH MIAMI FLORIDA
CITY OF NORTH MIAMI
PUBLIC WORKS UTILITIES

WINSON WATER TREATMENT PLANT
BID PACKAGE 3: WTP REHABILITATION
ELECTRICAL DETAILS
SHEET 6

DATE: JUNE 2014
SHEET: 307 OF 335
DRAWING: E-68

PERMITTING

PLOT DATE: 6/10/2014 1:18 PM BY: HS
XREFs= ..\block\44238-004-BP3-TB
File = H:\44238-004\Drawings\Bid Package 3 - WTP Rehab\Electrical\44238-004BP3-E68 Saved by jbrood Save date = 6/9/2014 8:13 PM

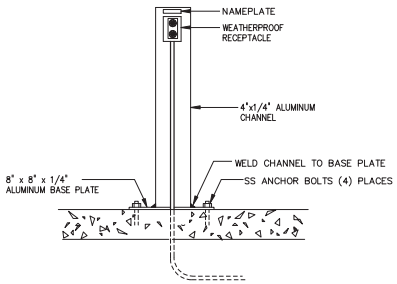

SWITCH PEDESTAL

DETAIL 45
NTS –

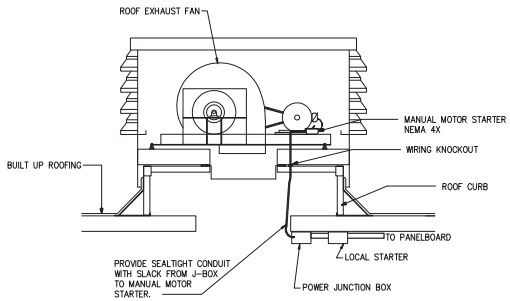

ROOF EXHAUST FAN CHEM BLDG

DETAIL 46
NTS –

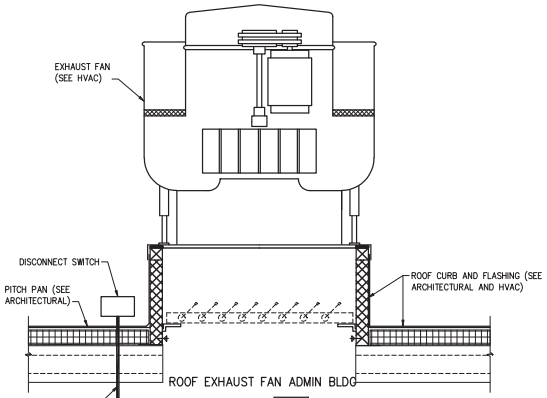

ROOF EXHAUST FAN ADMIN BLDG

DETAIL 47
NTS –

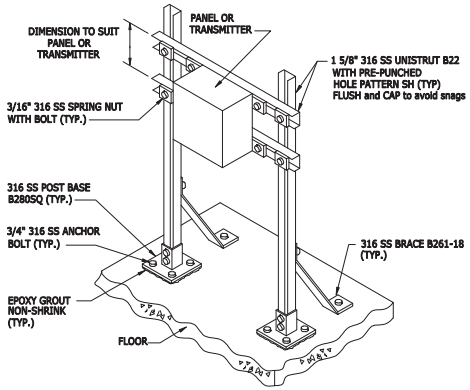

TRANSMITTER FLOOR STAND

DETAIL 48
NTS –

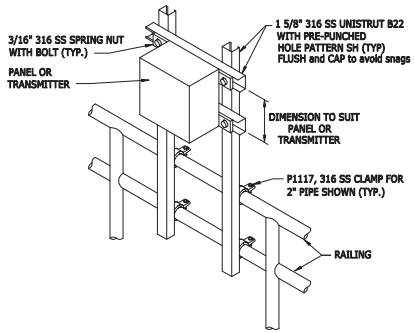

TRANSMITTER RAIL MOUNT

DETAIL 49
NTS –

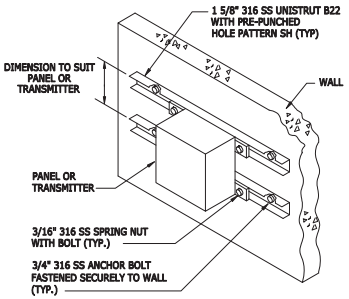

TRANSMITTER WALL MOUNT

DETAIL 50
NTS –

NO.	DATE	ISSUED FOR	BY

DESIGNED J.M.B.
DRAWN G.P.B.
CHECKED J.C.B.
PROJ. ENGR. J.C.B.

JOHN C. BURKE P.E.
No. 17301

HAZEN AND SAWYER
Environmental Engineers & Scientists
4000 Hollywood Boulevard, Suite 750N
Hollywood, Florida 33021
Certificate of Authorization Number: 2771

SCALE NTS

CLIENTS PROJECT: –
ENGINEERS PROJECT: 44238-004
CAD REFERENCE: 44238-004BP3-E69

NORTH MIAMI FLORIDA
CITY OF NORTH MIAMI
PUBLIC WORKS UTILITIES

WINSON WATER TREATMENT PLANT
BID PACKAGE 3: WTP REHABILITATION
ELECTRICAL DETAILS
SHEET 7

DATE: JUNE 2014
SHEET: 308 OF 335
DRAWING: E-69

PERMITTING

PLOT DATE: 6/10/2014 1:20 PM BY: HS
XREFs= ..\Tblock\44238-004-BP3-TB
File = H:\44238-004\Drawings\Bid Package 3 - WTP Rehab\Electrical\44238-004BP3-E69 Saved by jbrood Save date = 6/9/2014 7:16 PM

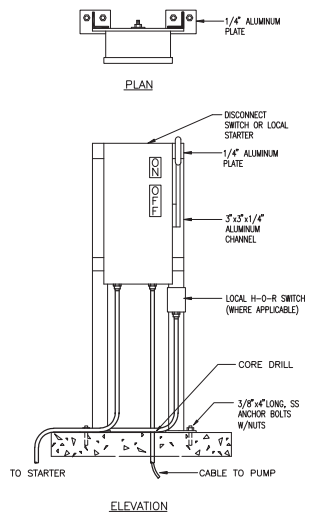

DISCONNECT SWITCH PEDESTAL WITH H-O-R- SWITCH

DETAIL 51
NTS –

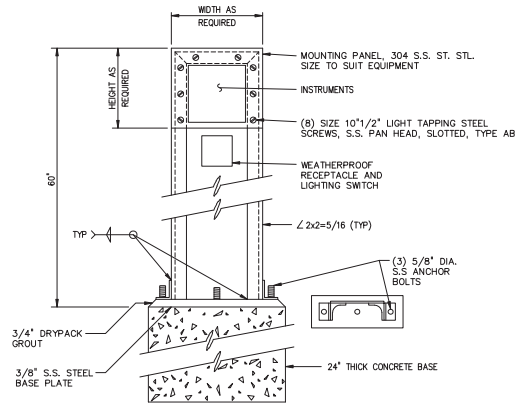

LOCAL PANEL SUPPORT

DETAIL 52
NTS –

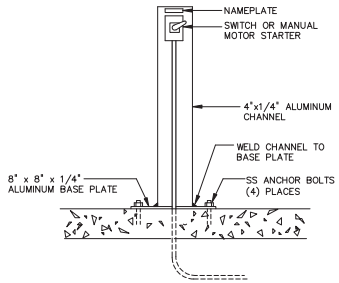

SWITCH PEDESTAL

DETAIL 53
NTS –

NO.	DATE	ISSUED FOR	BY

DESIGNED J.M.B.
DRAWN G.P.B.
CHECKED J.C.B.
PROJ. ENGR. J.C.B.

JOHN C. BURKE P.E.
No. 17301

HAZEN AND SAWYER
Environmental Engineers & Scientists
4000 Hollywood Boulevard, Suite 750N
Hollywood, Florida 33021
Certificate of Authorization Number: 2771

SCALE NTS

CLIENTS PROJECT: –
ENGINEERS PROJECT: 44238-004
CAD REFERENCE: 44238-004BP3-E70

NORTH MIAMI FLORIDA
CITY OF NORTH MIAMI
PUBLIC WORKS UTILITIES

WINSON WATER TREATMENT PLANT
BID PACKAGE 3: WTP REHABILITATION
ELECTRICAL DETAILS
SHEET 8

DATE: JUNE 2014
SHEET: 309 OF 335
DRAWING: E-70

PERMITTING

PLOT DATE: 6/10/2014 1:24 PM BY: HS
XREFs= ..\Tblock\44238-004-BP3-TB
File = H:\44238-004\Drawings\Bid Package 3 - WTP Rehab\Electrical\44238-004BP3-E70 Saved by jbrood Save date = 6/9/2014 7:53 PM

SYMBOLS

- T/S — THERMOSTAT/SENSOR
- GATE VALVE
- CHECK VALVE
- AUTOMATIC CONTROL VALVE 2-WAY
- AUTOMATIC CONTROL VALVE 3-WAY
- S — SOLENOID OPERATED VALVE
- GLOBE VALVE
- BALL VALVE
- BUTTERFLY VALVE
- COMBINATION BALANCING COCK & FLOW SENSOR
- TRIPLE DUTY VALVE (STRAIGHT, ANGLE PATTERN)
- PIPING ELBOW, 90 TURNED DOWN
- PIPING ELBOW, 90 TURNED UP
- PIPING TEE, OUTLET TURNED DOWN
- PIPING TEE, OUTLET TURNED UP
- PRESSURE GAGE WITH SHUTOFF COCK (BALL VALVE)
- THERMOMETER
- SUPPLY AIR DUCT SECTION-UP
- SUPPLY AIR DUCT SECTION-DOWN
- RETURN AIR DUCT SECTION-UP
- RETURN AIR DUCT SECTION-DOWN
- EXHAUST AIR DUCT SECTION-UP
- EXHAUST AIR DUCT SECTION-DOWN
- M — MOTORIZED DAMPER
- 2 FD — FIRE DAMPER WITH ACCESS DOOR
- # HOUR RATED WALL (2 HR. SHOWN)
- 2 FSD — FIRE/SMOKE DAMPER WITH ACCESS DOOR
- # HOUR RATED WALL (2 HR. SHOWN)
- VD — MANUAL VOLUME DAMPER
- BD — BACKDRAFT DAMPER
- SLOPE — CHANGE OF ELEVATION: RISE (R) OR DROP (D)

LINETYPES

RL	REFRIGERANT LIQUID		
RS	REFRIGERANT SUCTION	FOS	FUEL OIL SUPPLY
HWS	HOT WATER SUPPLY LINE	FOR	FUEL OIL RETURN
HWR	HOT WATER RETURN LINE	FOG	FUEL OIL GAUGE
V	VENT	FOV	FUEL OIL VENT
CW	COLD WATER	NG	NATURAL GAS
HPS	HIGH PRESSURE STEAM	CWS	CHILLED WATER SUPPLY
LPS	LOW PRESSURE STEAM	CWR	CHILLED WATER RETURN
CR	CONDENSATE RETURN	CF	CHEMICAL FEED
MU	MAKE UP WATER	C	CONDENSER WATER SUPPLY
D	DRAIN	CR	CONDENSER WATER RETURN

ABBREVIATIONS

AC	AIR CONDITIONING, AIR CONDITIONING UNIT
ACCU	AIR COOLED CONDENSING UNIT
AD	ACCESS DOOR
AF/BI FAN	AIRFOIL/BACKWARD INCLINED FAN
AFF	ABOVE FINISHED FLOOR
AFUE	ANNUAL FUEL UTILIZATION EFFICIENCY
AHU	AIR HANDLING UNIT
APD	AIR PRESSURE DROP
ATC	AUTOMATIC TEMPERATURE CONTROL
B	BOILER
BD	GRAVITY BACKDRAFT DAMPER
BHP	BRAKE HORSEPOWER
BOD	BOTTOM OF DUCT
BOR	BOTTOM OF REGISTER
BOU	BOTTOM OF UNIT
CB	CIRCUIT BREAKER
CFM	CUBIC FEET OF STANDARD AIR PER MINUTE
CH	CABINET UNIT HEATER
CHP	CHILLED WATER PUMP
CHS	CHILLED WATER SUPPLY
CHR	CHILLED WATER RETURN
DB	DRY BULB
DEC	DIRECT EVAPORATIVE COOLING
DIA, ø	DIAMETER
DM	DAMPER MOTOR
DWP	DOMESTIC WATER PUMP
EA	EXHAUST AIR
EAT	ENTERING AIR TEMPERATURE
EAV	EXHAUST AIR VENT OR EXHAUST AIR VALVE
EC	EVAPORATIVE COOLING
EDH	ELECTRIC DUCT HEATER
EF	EXHAUST FAN
EL/ELEV	ELEVATION
ES	ENTHALPY SENSOR
ESP	EXTERNAL STATIC PRESSURE
ET	EXPANSION TANK
EWT	ENTERING WATER TEMPERATURE
FA	FREE AREA
FC	FLEXIBLE CONNECTOR OR FAN COIL
FD	FIRE DAMPER WITH ACCESS DOOR
FLA	FULL LOAD AMPS
FO	FUEL OIL
FOP	FUEL OIL PUMP
FOR	FUEL OIL RETURN
FOS	FUEL OIL SUPPLY
FOV	FUEL OIL VENT
FPM	FEET PER MINUTE
FTR	FINNED TUBE RADIATION
GC	GENERAL CONTRACTOR
GPM	GALLONS PER MINUTE
HG	HOT GAS
HGP	HOT WATER/GLYCOL PUMP
HMCS	HVAC MONITOING AND CONTROLS SYSTEMS
HP	HORSEPOWER OR HEAT PUMP
HV	HEATING AND VENTILATING UNIT
HWS	HOT WATER SUPPLY
HWR	HOT WATER RETURN
IAV	INTAKE AIR VENT
IDEC	INDIRECT EVAPORATIVE COOLING
IN. WG	INCHES OF WATER GAGE
KW	KILOWATT HOUR
L	LOUVER
LAT	LEAVING AIR TEMPERATURE
LDA	LINEAR DIFFUSER (TYPE A)
LF	LINEAR FEET
LR	LINEAR RETURN
LWT	LEAVING WATER TEMPERATURE
MAU	MAKEUP AIR UNIT
MBH	1,000 BTU PER HOUR
MCA	MINIMUM CIRCUIT AMPACITY
MD	MOTORIZED DAMPER
MTD	MOUNTED
NC	NORMALLY CLOSED, NOISE CRITERIA
NK	NECK
NO	NORMALLY OPEN
NTS	NOT TO SCALE
NPWS	NON POTABLE WATER SUPPLY
NPWR	NO POTABLE WATER RETURN
OA	OUTSIDE AIR
OAI	OUTSIDE AIR INTAKE
ORP	OXYGEN REDUCTION POTENTIAL
P	PUMP
PA	PRESSURIZATION AIR
PD	PRESSURE DROP
PF	PROPELLER FAN
PH, ø	PHASE
PS	PRESSURE SENSOR
PW	POTABLE WATER
RA	RETURN AIR
RH	RELATIVE HUMIDITY
RO	ROOF OPENING
RL	REFRIGERANT LIQUID
RLA	RATED LINE AMPS
RS	REFRIGERANT SUCTION
RPM	REVOLUTIONS PER MINUTE
SA	SUPPLY AIR
SD	SMOKE DETECTOR
SF	SUPPLY AIR FAN
SH	SENSIBLE HEAT
SP	STATIC PRESSURE
SPEC	SPECIFICATION
SS	STAINLESS STEEL
SV	SOLENOID VALVE
SWP	SOLAR WATER PUMP
TEMP	TEMPERATURE
TF	TRANSFER FAN
TH	TOTAL HEAT
TOD	TOP OF DUCT
TOU	TOP OF UNIT
TOR	TOP OF REGISTER
TSP	TOTAL STATIC PRESSURE
TS	TEMPERATURE SENSOR
TYP	TYPICAL
UH	UNIT HEATER
UOR	UNDERSIDE OF ROOF
VAV	VARIABLE AIR VOLUME
V	VOLTS
VEL	VELOCITY
VD	VOLUME DAMPER
VH	HEATING CONTROL VALVE
VC	COOLING CONTROL VALVE
WPD	WATER PRESSURE DROP
W/	WITH
WB	WET BULB
WC	WATER COLUMN

(+)(+)(+)-AHU-1
- QUANTITY DESIGNATION
- EQUIPMENT DESIGNATION
- BUILDING DESIGNATION WHEN APPLICABLE

SR1 — SUPPLY AIR REGISTER
- SUPPLY AIR REGISTER (TYPE 1)
- SUPPLY AIR REGISTER (TYPE 2), ETC.

RR1 — RETURN AIR REGISTER (TYPE 1)
ER1 — EXHAUST AIR REGISTER (TYPE 1)

20X10 SR1 — 20X10 NECK SIZE, SUPPLY REGISTER (TYPE 1)
1000 CFM — 1000 CUBIC FEET PER MINUTE AIRFLOW RATE

24X24 CDA — CEILING DIFFUSER (TYPE A)
8-300
- LOUVERED FACE SIZE
- CUBIC FEET PER MINUTE AIRFLOW RATE SETTING (MAX)
- NECK DIAMETER

SHADED SECTION OF CEILING DIFFUSER INDICATES INACTIVE PANELS

2 — DOOR LOUVER NUMBER INDICATES SIZE SQ FT

GENERAL NOTES

1. THE SYMBOLS AND ABBREVIATIONS LIST ON THIS SHEET IS A COMPREHENSIVE STANDARD GUIDE INTENDED FOR GENERAL USE ON ALL PROJECTS. THEREFORE NOT ALL THE SYMBOLS AND ABBREVIATIONS CONTAINED IN THIS LIST ARE NECESSARILY USED ON THIS PARTICULAR PROJECT AND SHOULD BE USED FOR CLARIFICATION ONLY.
2. ALL DUCT DIMENSIONS ARE CLEAR DIMENSIONS TO INSIDE OF DUCT. DIMENSIONS TO DUCTS FROM FLOOR OR WALL SHALL BE TO THE OUTSIDE OF DUCT/INSULATION.
3. EQUIPMENT SIZES AND LOCATIONS ARE APPROXIMATE. ACTUAL DIMENSIONS TO BE DETERMINED BY EQUIPMENT FURNISHED. COORDINATE HVAC WORK WITH THE WORK OF ALL OTHER TRADES.
4. FINAL OPENING DIMENSIONS, CONCRETE PAD SIZES, AND LOCATIONS MUST BE COORDINATED DURING CONSTRUCTION WITH APPROVED EQUIPMENT.
5. FINAL SIZES OF FLOOR OPENINGS, DUCT PLENUMS, TRANSITIONS AND PIPING CONNECTIONS TO ALL EQUIPMENT SHALL BE DETERMINED BY EQUIPMENT FURNISHED.
6. ALL PIPING AND DUCTS IN FINISHED ROOMS SHALL BE CONCEALED IN FURRED CHASES OR SUSPENDED CEILINGS. ACCESS DOORS SHALL BE INSTALLED FOR ANY CONCEALED DEVICE REQUIRING ADJUSTMENT.
7. THE DRAWINGS ARE SCHEMATIC IN NATURE AND SHOW INTENDED GENERAL LOCATION OF HVAC EQUIPMENT AND SYSTEMS. NOT ALL OFFSETS AND REQUIRED FITTINGS FOR ACTUAL FIELD INSTALLATION ARE INTENDED TO BE SHOWN FOR INSTALLATION OF SYSTEMS IN THE SPACE AVAILABLE IN CONSIDERATION OF WORK OF OTHER TRADES AND FIELD CONDITIONS. CONTRACTOR SHALL PROVIDE ADDITIONAL OFFSETS IN DUCTWORK AND PIPING AS REQUIRED TO AVOID SUCH INTERFERENCES OR FIELD CONDITIONS AT NO ADDITIONAL COST TO THE ORIGINAL CONTRACT AMOUNT.
8. FIRST FIGURE OF DUCT SIZE INDICATES DIMENSION OF FACE SHOWN OR INDICATED OR WIDTH OF DUCT IN PLAN VIEW.
9. FLEXIBLE DUCT SHALL NOT EXCEED 6 FOOT MAXIMUM TOTAL LENGTH BETWEEN DUCT AND CONNECTED AIR DEVICE.
10. COORDINATE THE REQUIREMENTS FOR HVAC OPENINGS AND SLEEVES IN BUILDING ELEMENTS WITH THE GC.
11. CONTRACTOR SHALL REFER TO SPECIFICATION SECTION 09900 FOR PAINTING REQUIREMENTS UNLESS OTHERWISE NOTED.
12. REFER TO ELECTRICAL DRAWINGS OR SPECIFICATIONS FOR INTERLOCKING WIRING REQUIREMENTS.
13. NO DUCTWORK SHALL BE INSTALLED OVER ELECTRICAL EQUIPMENT.
14. CONTRACTOR SHALL COORDINATE DUCTWORK INSTALLATION WITH OTHER TRADES SO THAT THE DUCTWORK IS INSTALLED BEFORE THE PIPING, LIGHTING AND ELECTRICAL CONDUIT.
15. PROVIDE ADEQUATE SUPPORT, PER THE MANUFACTURER'S RECOMMENDATIONS, FOR ALL HVAC EQUIPMENT.
16. CONTRACTOR SHALL BE RESPONSIBLE FOR CHECKING ELECTRICAL RATINGS FROM CERTIFIED DRAWINGS OF EQUIPMENT AND SHALL MAKE ANY BRANCH CIRCUIT DISTRIBUTION MODIFICATION REQUIREMENTS WITHOUT ANY ADDITIONAL COST TO OWNER. THE CONTRACTOR SHALL SUBMIT A SCHEDULE OF SUCH CHANGES FOR APPROVAL BY ENGINEER.
17. WHEREVER THE REQUIREMENTS AND REGULATIONS OF STATE, FEDERAL AND LOCAL AUTHORITIES HAVING JURISDICTION DIFFER FROM THE DRAWINGS OR SPECIFICATIONS, THEY SHALL TAKE PRECEDENCE AND SHALL BE MADE PART OF THE CONTRACT (EXCEPT WHERE THE DRAWINGS OR SPECIFICATIONS ARE MORE STRINGENT).
18. THE CONTRACTOR SHALL PROVIDE AND INSTALL FIRE AND SMOKE RATED DAMPERS IN HVAC DUCTS WHICH PENETRATE FIRE RATED BUILDING ASSEMBLIES AS SHOWN ON ARCHITECTURAL DRAWINGS.
19. DUCTWORK AND PLENUM TO LOUVERS SHALL BE CONNECTED TO FRAMED OPENINGS AND, SEALED AIRTIGHT AND WEATHER RESISTANT.
20. FANS SHALL BE PROVIDED WITH A DUCT COLLAR FOR INSTALLATION OF DUCT SMOKE DETECTORS.
21. THERMOSTATS, SENSORS, AND/OR CONTROL PANEL LOCATIONS SHOWN ARE APPROXIMATE AND SHALL BE COORDINATED TO SUIT FIELD CONDITIONS.
22. INSTALL WALL MTD SENSORS, CONTROLS AND THERMOSTATS 4'-0" AFF UNLESS OTHERWISE NOTED. ALIGN WITH OTHER NEARBY ITEMS SUCH AS LIGHT SWITCHES. DO NOT INSTALL CLOSER THAN 6-INCHES FROM EDGE OF DOOR FRAME OR CORNER OF WALL AS SHOWN ON ARCH PLANS. WHERE CONFLICTS MAY OCCUR WITH ITEMS SUCH AS LIGHT SWITCHES, MOUNT THE SENSOR OR CONTROL DEVICE 4'-6" AFF CENTERED ABOVE THE LIGHT SWITCH.
23. COORDINATE THE LOCATIONS OF HVAC ITEMS EXPOSED IN FINISHED SPACES W/ ARCHITECTURAL FEATURES INDICATED ON THE DRAWINGS.
24. PROVIDE ADEQUATE MEANS OF ACCESS CLEARANCE FOR ALL HVAC/MECHANICAL EQUIPMENT AND SYSTEMS THAT REQUIRE ACCESS FOR PROPER OPERATION, MAINTENANCE AND REPAIR PER RECOMMENDED MANUFACTURER CLEARANCES. PROVIDE ACCESS DOORS WHERE NECESSARY IN FINISHED WALLS OR DRYWALL CEILINGS FOR ACCESS TO VALVES, DAMPERS, OR CONTROL DEVICES.
25. COORDINATE THE REQUIREMENTS OF HVAC HANGERS AND SUPPORTS W/ OTHER PRIME CONTRACTORS PROVIDING STRUCTURAL AND/OR ARCHITECTURAL BUILDING ELEMENTS WHICH HVAC SUPPORTS SHALL INTERFACE.
26. HVAC CONTRACTOR SHALL PROVIDE ALL FIRESTOPPING AND PIPE SLEEVES FOR ALL PIPE AND DUCT PENETRATIONS THRU FIRE RATED BUILDING ASSEMBLIES.
27. CONTRACTOR SHALL OBTAIN AND PAY ALL FEES RELATED TO PERMITTING, AND INSPECTIONS.
28. FOR ADDITIONAL REQUIREMENTS SEE SPECIFICATIONS.

NO.	DATE	ISSUED FOR	BY
1	4/1/14	100% QA COMMENTS	H.J.V.

DESIGNED B.L.S.
DRAWN C.M.S.
CHECKED B.L.S.
PROJ. ENGR. G.A.B.

BERNARD L. STEIGER P.E.
No. 49808

HAZEN AND SAWYER
Environmental Engineers & Scientists
4000 Hollywood Boulevard, Suite 750N
Hollywood, Florida 33021
Certificate of Authorization Number: 2771

SCALE –

CLIENTS PROJECT: –
ENGINEERS PROJECT: 44238-004
CAD REFERENCE: 44238-004BP3-H01

NORTH MIAMI FLORIDA
CITY OF NORTH MIAMI
PUBLIC WORKS UTILITIES

WINSON WATER TREATMENT PLANT
BID PACKAGE 3: WTP REHABILITATION
HVAC SYMBOLS, ABBREVIATIONS AND NOTES

DATE: JUNE 2014
SHEET: 310 OF 335
DRAWING: H-01

PERMITTING

PLOT DATE: 6/10/2014 2:43 PM BY: HSCALII
XREFs= .\Tblock\44238-004-BP3-TB
File = H:\44238-004\Drawings\Bid Package 3 - WTP Rehab\Hvac\44238-004BP3-H01 Saved by HsCal2 Save date = 6/9/2014 6:19 PM

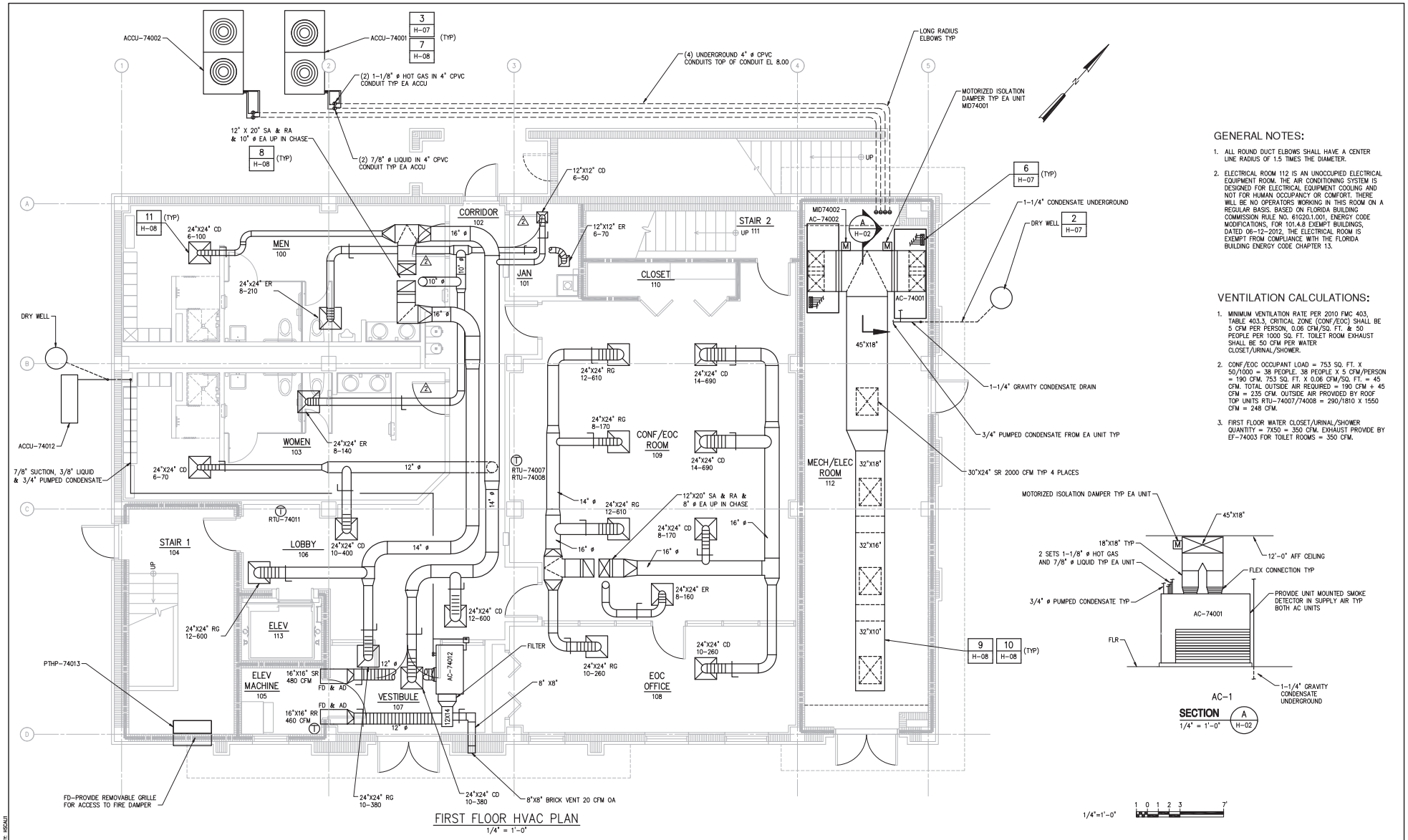

FIRST FLOOR HVAC PLAN
1/4" = 1'-0"

GENERAL NOTES:

1. ALL ROUND DUCT ELBOWS SHALL HAVE A CENTER LINE RADIUS OF 1.5 TIMES THE DIAMETER.
2. ELECTRICAL ROOM 112 IS AN UNOCCUPIED ELECTRICAL EQUIPMENT ROOM. THE AIR CONDITIONING SYSTEM IS DESIGNED FOR ELECTRICAL EQUIPMENT COOLING AND NOT FOR HUMAN OCCUPANCY OR COMFORT. THERE WILL BE NO OPERATORS WORKING IN THIS ROOM ON A REGULAR BASIS. BASED ON FLORIDA BUILDING COMMISSION RULE NO. 61G20.1.001, ENERGY CODE MODIFICATIONS, FOR 101.4.8 EXEMPT BUILDINGS, DATED 06-12-2012, THE ELECTRICAL ROOM IS EXEMPT FROM COMPLIANCE WITH THE FLORIDA BUILDING ENERGY CODE CHAPTER 13.

VENTILATION CALCULATIONS:

1. MINIMUM VENTILATION RATE PER 2010 FMC 403, TABLE 403.3, CRITICAL ZONE (CONF/EOC) SHALL BE 5 CFM PER PERSON, 0.06 CFM/SQ. FT. & 50 PEOPLE PER 1000 SQ. FT. TOILET ROOM EXHAUST SHALL BE 50 CFM PER WATER CLOSET/URINAL/SHOWER.
2. CONF/EOC OCCUPANT LOAD = 753 SQ. FT. X 50/1000 = 38 PEOPLE. 38 PEOPLE X 5 CFM/PERSON = 190 CFM. 753 SQ. FT. X 0.06 CFM/SQ. FT. = 45 CFM. TOTAL OUTSIDE AIR REQUIRED = 190 CFM + 45 CFM = 235 CFM. OUTSIDE AIR PROVIDED BY ROOF TOP UNITS RTU-74007/74008 = 290/1810 X 1550 CFM = 248 CFM.
3. FIRST FLOOR WATER CLOSET/URINAL/SHOWER QUANTITY = 7X50 = 350 CFM. EXHAUST PROVIDE BY EF-74003 FOR TOILET ROOMS = 350 CFM.

AC-1
SECTION A H-02
1/4" = 1'-0"

NO.	DATE	ISSUED FOR	BY

DESIGNED B.L.S.
DRAWN C.M.S.
CHECKED B.L.S.
PROJ. ENGR. G.A.B.

BERNARD L. STEIGER P.E.
No. 49808

HAZEN AND SAWYER
Environmental Engineers & Scientists
4000 Hollywood Boulevard, Suite 750N
Hollywood, Florida 33021
Certificate of Authorization Number: 2771

SCALE –

CLIENTS PROJECT: –
ENGINEERS PROJECT: 44238-004
CAD REFERENCE: 44238-004BP3-H02

NORTH MIAMI FLORIDA
CITY OF NORTH MIAMI
PUBLIC WORKS UTILITIES

WINSON WATER TREATMENT PLANT
BID PACKAGE 3: WTP REHABILITATION
NEW ADMINISTRATION BUILDING
FIRST FLOOR – HVAC PLAN

DATE: JUNE 2014
SHEET: 311 OF 335
DRAWING: H-02

PERMITTING

PLOT DATE: 6/10/2014 2:43 PM BY: HSCALIT

XREFs= ..\Block\44238-004-BP3-TB,..\Base-BP3\H-BP3-Admin-Plan-Bottom,..\Base-BP3\A-BP3-Admin-Plan-Bottom-Reflected-Ceiling,..\Base-BP3\A-BP3-Admin-Plan-Bottom,..\Base-BP3\A-BP3-Admin-Plan-Col-Grid

File = H:\44238-004\Drawings\Bid Package 3 - WTP Rehab\Hvac\44238-004BP3-H02 Saved by bsteiger Save date = 6/9/2014 6:50 PM

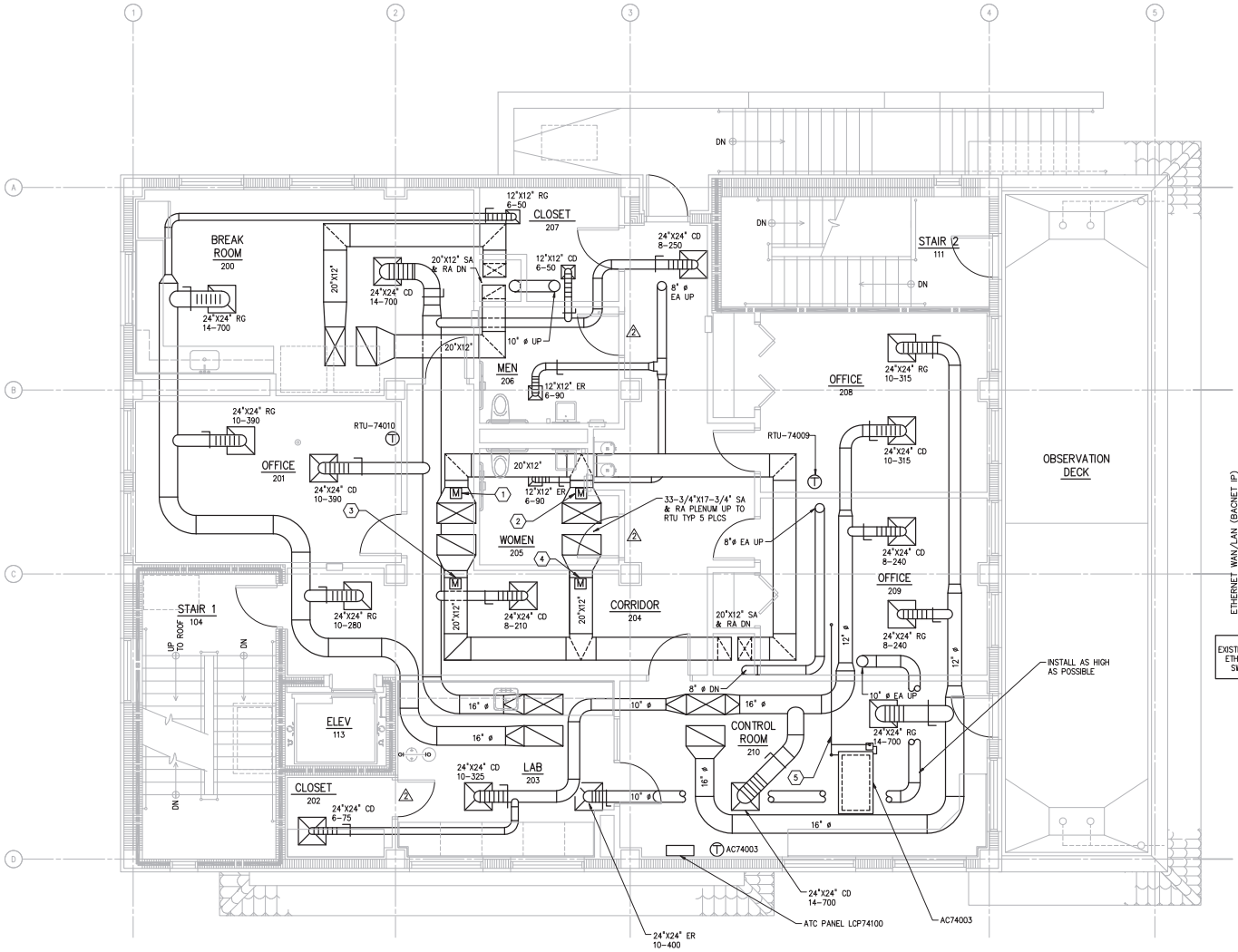

SECOND FLOOR HVAC PLAN
1/4" = 1'-0"

GENERAL NOTES:

1. ALL ROUND DUCT ELBOWS SHALL HAVE A CENTER LINE RADIUS OF 1.5 TIMES THE DIAMETER.

CODED NOTES:

1. MOTOR OPERATED ISOLATION DAMPER, MID-74007A.
2. MOTOR OPERATED ISOLATION DAMPER, MID-74008A.
3. MOTOR OPERATED ISOLATION DAMPER, MID-74007B.
4. MOTOR OPERATED ISOLATION DAMPER, MID-74008B.
5. 3/4"ø PUMPED CONDENSATE, 7/8" ø SUCTION AND 1/2" ø LIQUID TO ROOF MOUNTED ACCU-74003.

VENTILATION CALCULATIONS:

1. MINIMUM VENTILATION RATE PER 2010 FMC 403, TABLE 403.3 FOR CRITICAL ZONE (LAB) SHALL BE 10 CFM PER PERSON, 0.18 CFM PER SQ. FT., 25 PEOPLE PER 1000 SQ. FT. OF FLOOR AREA. TOILET ROOM EXHAUST SHALL BE 50 CFM PER WATER CLOSET/URINAL/SHOWER.
2. OUTSIDE AIR FOR CRITICAL ZONE (LAB) = 219 SQ. FT. X 25/1000 = 6 PEOPLE X 10 CFM/PERSON = 60 CFM. PLUS 219 SQ. FT. X 0.18 CFM/SQ. FT. = 39 CFM. TOTAL OUTSIDE AIR REQUIRED = 60 + 39 = 99 CFM. OUTSIDE AIR PROVIDED BY ROOF TOP UNIT RTU-74009 = 400 CFM X 414/1655 OUTSIDE AIR = 100 CFM.
3. SECOND FLOOR WATER CLOSET/URINAL/SHOWER QUANTITY = 2X50 = 100 CFM. EXHAUST PROVIDE BY EF-74005 FOR TOILET ROOMS = 180 CFM.

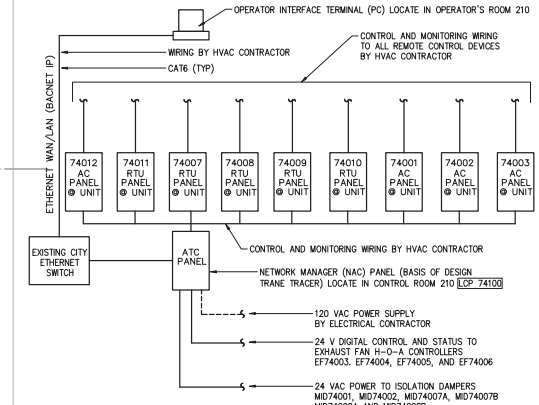

BAS RISER SCHEMATIC
ALL WIRING AND CONDUIT SHALL BE IN ACCORDANCE WITH DIVISION 16 REQUIREMENTS

1/4"=1'-0"

NO.	DATE	ISSUED FOR	BY

DESIGNED B.L.S.
DRAWN C.M.S.
CHECKED B.L.S.
PROJ. ENGR. G.A.B.

BERNARD L. STEIGER P.E.
No. 49808

HAZEN AND SAWYER
Environmental Engineers & Scientists
4000 Hollywood Boulevard, Suite 750N
Hollywood, Florida 33021
Certificate of Authorization Number: 2771

SCALE –

CLIENTS PROJECT: –
ENGINEERS PROJECT: 44238-004
CAD REFERENCE: 44238-004BP3-H03

CITY OF NORTH MIAMI
PUBLIC WORKS UTILITIES

WINSON WATER TREATMENT PLANT
BID PACKAGE 3: WTP REHABILITATION
NEW ADMINISTRATION BUILDING
SECOND FLOOR – HVAC PLAN

DATE: JUNE 2014
SHEET: 312 OF 335
DRAWING: H-03

PERMITTING

PLOT DATE: 6/10/2014 2:43 PM BY: HSCALIT

XREFs= ..\Block\44238-004-BP3-TB,..\Base-BP3\H-BP3-Admin-Plan-Top,..\Base-BP3\A-BP3-Admin-Plan-Top,..\Base-BP3\A-BP3-Admin-Plan-Top-Reflected-Ceiling,..\Base-BP3\A-BP3-Admin-Plan-Col-Grid

File = H:\44238-004\Drawings\Bid Package 3 - WTP Rehab\Hvac\44238-004BP3-H03 Saved by bsteiger Save date = 6/9/2014 6:35 PM

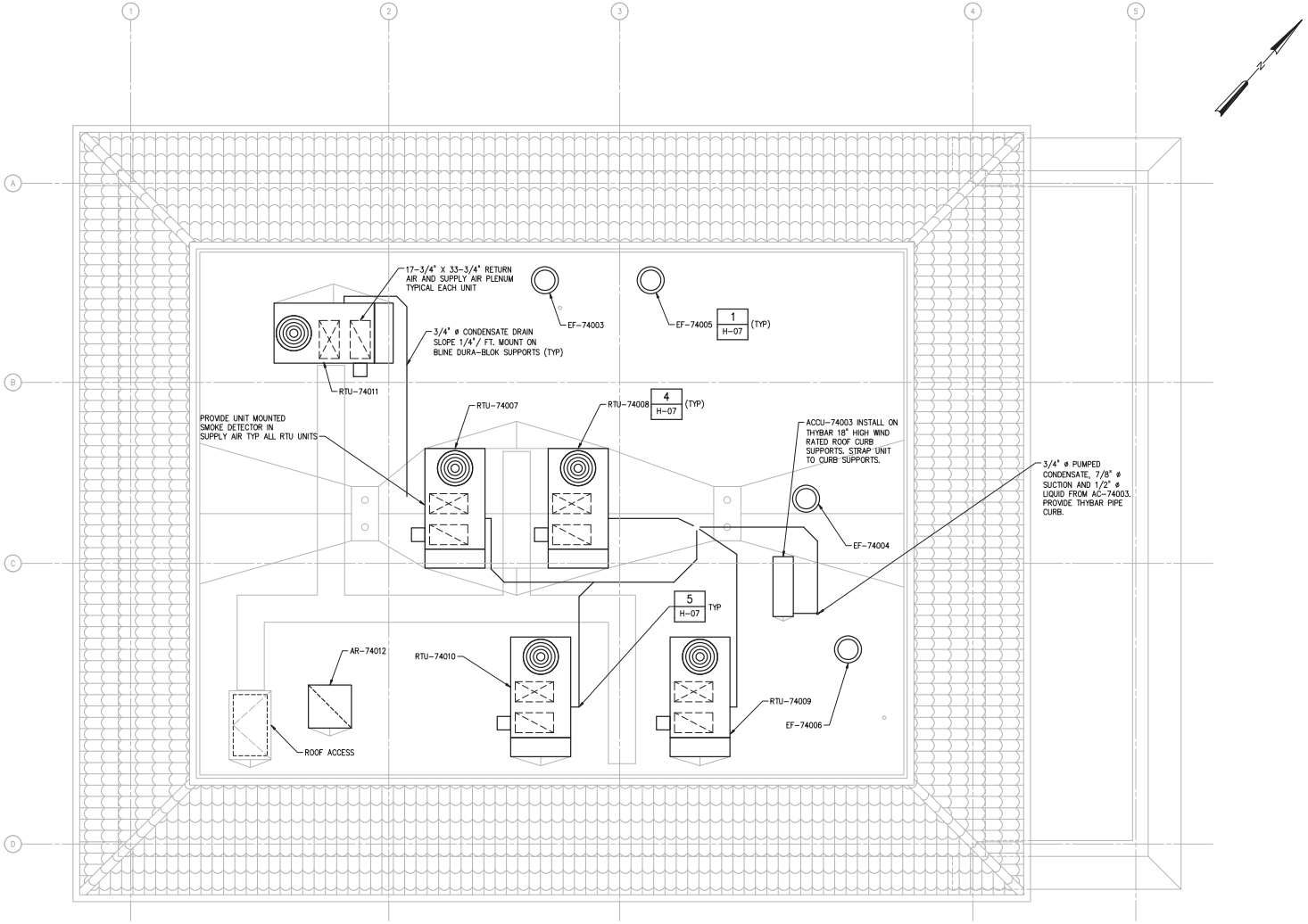

ROOF HVAC PLAN
1/4" = 1'-0"

1/4"=1'-0" 1 0 1 2 3 7'

NO.	DATE	ISSUED FOR	BY

DESIGNED B.L.S.
DRAWN C.M.S.
CHECKED B.L.S
PROJ. ENGR. G.A.B.

BERNARD L. STEIGER P.E.
No. 49808

HAZEN AND SAWYER
Environmental Engineers & Scientists
4000 Hollywood Boulevard, Suite 750N
Hollywood, Florida 33021
Certificate of Authorization Number: 2771

SCALE –

CLIENTS PROJECT: –
ENGINEERS PROJECT: 44238-004
CAD REFERENCE: 44238-004BP3-H04

NORTH MIAMI FLORIDA
CITY OF NORTH MIAMI
PUBLIC WORKS UTILITIES

WINSON WATER TREATMENT PLANT
BID PACKAGE 3: WTP REHABILITATION
NEW ADMINISTRATION BUILDING
ROOF – HVACPLAN

DATE: JUNE 2014
SHEET: 313 OF 335
DRAWING: H-04

PERMITTING

PLOT DATE: 6/10/2014 2:44 PM BY: HSCAUI

XREFs= ..\Tblock\44238-004-BP3-TB,..\Base-BP3\A-BP3-Admin-Plan-Roof,..\Base-BP3\H-BP3-Admin-Plan-Roof,..\Base-BP3\A-BP3-Admin-Plan-Col-Grid

File = H:\44238-004\Drawings\Bid Package 3 - WTP Rehab\Hvac\44238-004BP3-H04 Saved by Bernard Save date = 6/9/2014 6:05 PM

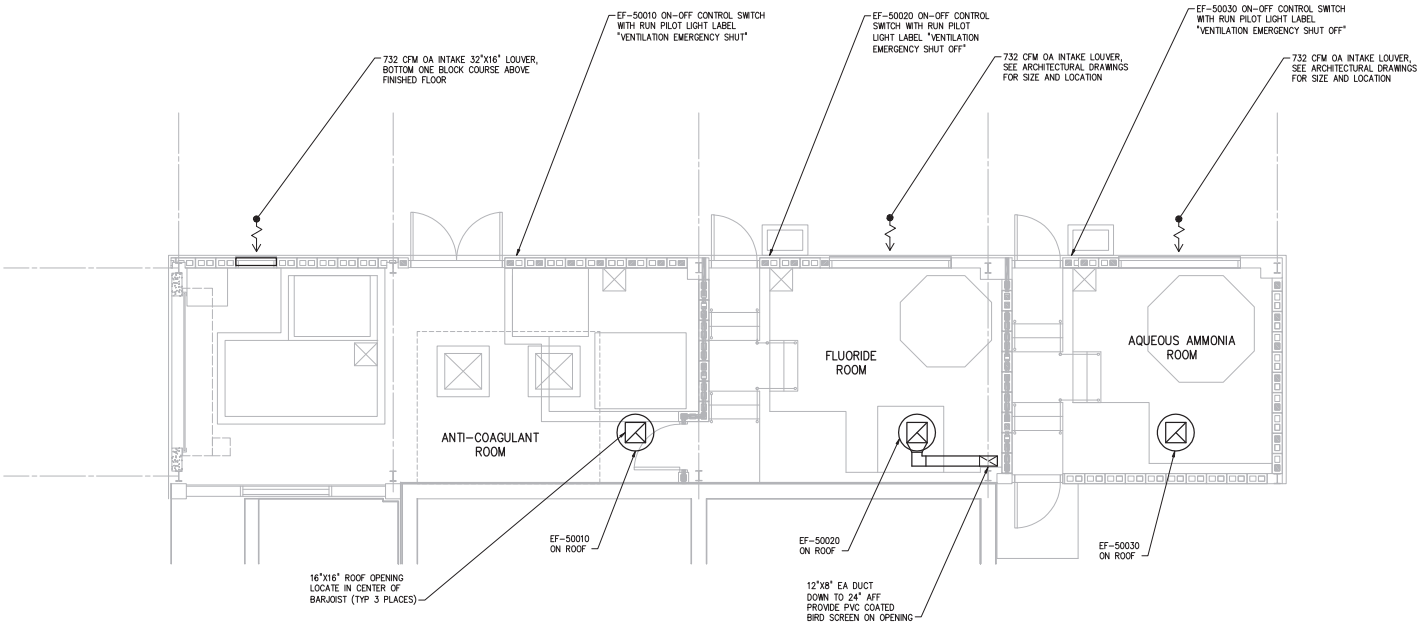

BOTTOM PLAN
1/4" = 1'-0"

VENTILATION CALCULATIONS:

1. MINIMUM VENTILATION RATE PER 2010 FMC 502.8 SHALL BE 1 CFM PER SQUARE FOOT OF FLOOR AREA.
2. COAGULANT ROOM: 482 SQUARE FEET = 482 CFM MINIMUM REQUIRED. 732 CFM PROVIDED BY EF-50010.
3. FLUORIDE ROOM: 262 SQUARE FEET = 262 CFM MINIMUM REQUIRED. 732 CFM PROVIDED BY EF-50020.
4. AMMONIA ROOM: 231 SQUARE FEET = 231 CFM MINIMUM REQUIRED. 732 CFM RPROVIDE BY EF-50030.

1/4"=1'-0" 1 0 1 2 3 7'

PLOT DATE: 6/10/2014 2:44 PM BY: HSCALIT

NO.	DATE	ISSUED FOR	BY

DESIGNED B.L.S.
DRAWN C.M.S.
CHECKED B.L.S.
PROJ. ENGR. G.A.B.

BERNARD L. STEIGER P.E.
No. 49808

HAZEN AND SAWYER
Environmental Engineers & Scientists
4000 Hollywood Boulevard, Suite 750N
Hollywood, Florida 33021
Certificate of Authorization Number: 2771

SCALE –

CLIENTS PROJECT: –
ENGINEERS PROJECT: 44238-004
CAD REFERENCE: 44238-004BP3-H05

NORTH MIAMI FLORIDA
CITY OF NORTH MIAMI
PUBLIC WORKS UTILITIES

WINSON WATER TREATMENT PLANT
BID PACKAGE 3: WTP REHABILITATION
CHEMICAL HANDLING FACILITY HVAC PLAN

DATE: JUNE 2014
SHEET: 314 OF 335
DRAWING: H-05

PERMITTING

XREFs= ..\Tblock\44238-004-BP3-TB,..\Base-BP3\S-BP3-ChemHand-Plan,..\Base-BP3\H-BP3-ChemHand-Plan

File = H:\44238-004\Drawings\Bid Package 3 - WTP Rehab\Hvac\44238-004BP3-H05 Saved by Bernard Save date = 6/9/2014 8:55 PM

PRECISION AIR CONDITIONING SCHEDULE

UNIT No.	LOCATION	AREA SERVED	MFG & MODEL (OR EQUAL)	TYPE	*CAPACITY BTU/HR		FAN DATA				DX–COOLING COIL DATA			ELECTRIC HEAT		ELECTRIC				NOTES
					TOTAL	SENSIBLE	NUMBER	CFM	H.P.	E.S.P.	AREA S.F.	ROWS	F.P.M.	STAGES	K.W.	FLA	WSA	OPD	V/P/HZ	
AC–74001	ADMINISTRATION BUILDING	ELECTRICAL ROOM	LIEBERT VS053ASAOS	AIR COOLED	193,800	186,800	2	8,000	5	0.8	24.7	3	319.8	SCR	25	56.7	69	70	460 / 3 / 60	1,2,3,4,5,6,7,8
AC–74002	ADMINISTRATION BUILDING	ELECTRICAL ROOM	LIEBERT VS053ASAOS	AIR COOLED	193,800	186,800	2	8,000	5	0.8	24.7	3	319.8	SCR	25	56.7	69	70	460 / 3 / 60	2,3,4,5,6,7,8,9
AC–74003	ADMINISTRATION BUILDING	CONTROL ROOM	LIEBERT MMD36E7A	AIR COOLED	33,800	33,800	1	1,250	0.5	0.3	3.1	3	394	1	7.3	9.8	12.3	15	460 / 3 / 60	4,5,10,11
AC–74012	ADMINISTRATION BUILDING	ELEVATOR MACHINE ROOM	LIEBERT MMD12E7P	AIR COOLED	14,400	13,500	1	480	0.2	0.3	2.44	2	232	1	3.6	20.2	25.3	30	208 / 1 / 60	4,5,10,11,12

NOTES:
1. OPERATING UNIT.
2. 11.0 EER MATCHED WITH ACCU.
3. WITH RETURN AIR GRILLE.
4. SEE SCHEDULE BELOW FOR ACCU.
5. SPECIFICATION 15800.
6. WEIGHT 2100 POUNDS.
7. PROVIDE 4" HIGH HOUSEKEEPING CONCRETE SUPPORT PAD.
8. UNIT SHALL BE DESIGNED FOR FRONT PANEL SERVICE.
9. STANDBY UNIT.
10. WEIGHT 250 POUNDS.
11. 13 SEER MATCHED WITH ACCU.
12. SET THERMOSTAT SENSITIVITY AT 6°F.

* 63° F EWB, 80° F EDB AND 95° F DB AMBIENT

PRECISION AIR COOLED CONDENSER UNIT SCHEDULE

UNIT No.	LOCATION	AREA SERVED	UNIT SERVED	MFG & MODEL (OR EQUAL)	AMBIENT TEMP (F)	HEAT REJECTION			CONDENSER FAN				ELECTRIC				NOTES
						KBTUH	KW	REFRIG.	DIA IN	HP EA.	CFM	QTY	FLA	WSA	OPD	V/P/HZ	
ACCU–74001	ADMINISTRATION BUILDING	ELECTRICAL ROOM	AC–74001	LIEBERT CD 308	100	238	69.3	R407C	26	3/4	16,650	3	5.9	6.5	15	460 / 3 / 60	1,2,3,4,5
ACCU–74002	ADMINISTRATION BUILDING	ELECTRICAL ROOM	AC–74002	LIEBERT CD 308	100	238	69.3	R407C	26	3/4	16,650	3	5.9	6.5	15	460 / 3 / 60	1,2,3,4,5
ACCU–74003	ADMINISTRATION BUILDING	CONTROL ROOM	AC–74003	LIEBERT PFH037ACAH7	105	37	10.8	R407C	–	0.2	3,000	1	7.4	8.8	15	460 / 3 / 60	4,6,7
ACCU–74012	ADMINISTRATION BUILDING	ELEVATOR MACHINE ROOM	AC–?	LIEBERT PFH014ACPL7	95	14	4.1	R407C	–	0.2	2,200	1	9.1	11.0	15	208 / 1 / 60	4,6,7

NOTES:
1. LOW AMBIENT CONTROL.
2. SOUND PRESSURE 77.3 dBA.
3. 11.0 EER MATCHED WITH AC UNIT.
4. SPECIFICATION 15800.
5. WEIGHT 700 POUNDS.
6. WEIGHT 350 POUNDS.
7. 13 SEER MATCHED WITH AC UNIT.

DESIGN CONDITIONS

TEMPERATURES
OUTSIDE WINTER: 46° F DB INSIDE WINTER: 72° F DB
OUTSIDE SUMMER: 90° F DB / 77° F WB INSIDE SUMMER 72° F
ENERGY CODE COMPLIANCE METHOD
TOTAL BUILDING PERFORMANCE ENERGY GAUGE CALCULATIONS SUBMITTAL

FAN SCHEDULE

MARK No.	LOCATION	AREA SERVED	MANUFACTURER & MODEL No.	TYPE	CFM	SP (IN WG)	SONES	FAN RPM	MOTOR					WEIGHT POUNDS	ROOF OPENG	FAN INTERLOCK SCHEDULE		NOTES
									HP	MAX. BHP	RPM	ELEC.	DRIVE			CONTROL	WITH	
EF–74003	ADMINISTRATION BUILDING	MEN/WOMEN/JAN (100,101,103)	GREENHECK CUE–090–VG	CENTRIFUGAL	420	0.58	7.9	1550	1/6	0.09	1,550	120 / 1 / 60	DIRECT	60	12–1/2X12–1/2	HOA	BAS–RTU74011	1,2
EF–74004	ADMINISTRATION BUILDING	CONFERENCE/EOC (109)	GREENHECK CUE–070D	CENTRIFUGAL	160	0.38	3.9	1550	1/8	0.02	1,550	120 / 1 / 60	DIRECT	30	10–1/2X10–1/2	HOA	BAS–RTU74007 & 8	1,2
EF–74005	ADMINISTRATION BUILDING	MEN/WOMEN (205,206)	GREENHECK CUE–070D	CENTRIFUGAL	180	0.36	3.9	1550	1/8	0.02	1,550	120 / 1 / 60	DIRECT	30	10–1/2X10–1/2	HOA	BAS–RTU74010	1,2
EF–74006	ADMINISTRATION BUILDING	LAB (203)	GREENHECK CUE–085–VG	CENTRIFUGAL	400	0.36	7.4	1550	1/6	0.05	1,550	120 / 1 / 60	DIRECT	30	12–1/2X12–1/2	HOA	BAS–RTU74009	1,2
EF–50010	CHEMICAL HANDLING FACILITY	COAGULANT ROOM	AEROVENT AWAB–14	CENTRIFUGAL	732	0.50	11.9	1125	1/4	0.12	1,750	120 / 1 / 60	BELT	80	16X16	ON–OFF	NONE	1
EF–50020	CHEMICAL HANDLING FACILITY	FLUORIDE ROOM	AEROVENT AWAB–14	CENTRIFUGAL	732	0.50	11.9	1125	1/4	0.12	1,750	120 / 1 / 60	BELT	80	16X16	ON–OFF	NONE	1
EF–50030	CHEMICAL HANDLING FACILITY	AMMONIA ROOM	AEROVENT AWAB–14	CENTRIFUGAL	732	0.50	11.9	1125	1/4	0.12	1,750	120 / 1 / 60	BELT	80	16X16	ON–OFF	NONE	1

NOTES:
1. SPECIFICATION 15800.
2. HI PRO POLYESTER COATING.

PACKAGED ROOF TOP UNIT SCHEDULE

UNIT No.	LOCATION	AREA SERVED	MANUFACTURER & MODEL No.	TYPE	CAPACITY BTU/HR		INDOOR FAN DATA					ELECTRIC HEAT		ELECTRICAL			NOTES
					TOTAL	SENSIBLE	TYPE	CFM	H.P.	E.S.P.	OA CFM	STAGES	K.W.	MCA	MAX FUSE/CB	V/P/HZ	
RTU–74007	ADMINISTRATION BUILDING	ADMINISTRATION	TRANE – THC067	CONVERTIBLE	58,600	43,600	DIRECT/VS	1,810	1	1.00	290 MINIMUM	1	6.0	15.2	20	460/3/60	1,2,3,4,5,6,7,8,10
RTU–74008	ADMINISTRATION BUILDING	ADMINISTRATION	TRANE – THC067	CONVERTIBLE	58,600	43,600	DIRECT/VS	1,810	1	1.00	290 MINIMUM	1	6.0	15.2	20	460/3/60	1,2,3,4,5,6,7,9,10
RTU–74009	ADMINISTRATION BUILDING	ADMINISTRATION	TRANE – THC067	CONVERTIBLE	56,900	41,700	DIRECT/VS	1,655	1	1.00	414 MINIMUM	1	6.0	15.2	20	460/3/60	1,2,3,4,5,6,7,8,10
RTU–74010	ADMINISTRATION BUILDING	ADMINISTRATION	TRANE – THC067	CONVERTIBLE	56,900	41,700	DIRECT/VS	1,600	1	1.00	240 MINIMUM	1	6.0	15.2	20	460/3/60	1,2,3,4,5,6,7,8,10
RTU–74011	ADMINISTRATION BUILDING	ADMINISTRATION	TRANE – THC067	CONVERTIBLE	56,900	41,700	DIRECT/VS	1,600	1	1.00	420 MINIMUM	2	12.0	23.9	25	460/3/60	1,2,3,4,5,6,7,8,10

NOTES:
1. WITH ECONOMIZER.
2. LEED REQUIRED SEER 17.2 PER ARI 210/240.
3. R–410A REFRIGERANT.
4. PROVIDE HINGED ACCESS DOORS.
5. WEIGHT: 550 POUNDS.
6. SEE SPECIFICATION 15800.
7. SCHEDULED CAPACITY AT 95° DB OUTDOOR AND 80° EDB / 67° EWB EVAPORATOR COIL TEMPERATURE.
8. OPERATING
9. STANDBY
10. UNIT MOUNTED FAN POWERED EXHAUST OF RETURN AIR, WHEN USING ECONOMIZER, SHALL MAINTAIN BUILDING PRESSURIZATION. FAN MOTOR 460V, 1ø, 2.2 FLA, 0.33 BHP, 1075 RPM.

AIR DEVICE SCHEDULE

MARK No.	LOCATION	AREA SERVED	MANUFACTURER & MODEL No.	MATERIAL	FACE SIZE (INCHES)	MAX. S.P. IN WG	MOUNTING	NOTES
CD	ADMINISTRATION BUILDING	OFFICES	KRUEGER 51400	ALUMINUM	SEE PLANS	0.05	CEILING	1
RG	ADMINISTRATION BUILDING	OFFICES	KRUEGER 56690	ALUMINUM	SEE PLANS	0.03	CEILING	–
ER	ADMINISTRATION BUILDING	OFFICES	KRUEGER 56690	ALUMINUM	SEE PLANS	0.03	CEILING	–
SR	ADMINISTRATION BUILDING	ELECTRICAL ROOM	KRUEGER 5880	ALUMINUM	SEE PLANS	0.03	DUCT	2
RR	ADMINISTRATION BUILDING	ADMINISTRATION	KRUEGER S580	ALUMINUM	SEE PLANS	0.03	DUCT	2

NOTES:
1. WITH IB INSULATION BACKING. 2. WITH OPPOSED BLADE DAMPER.

INTAKE / RELIEF VENT SCHEDULE

MARK No.	LOCATION	AREA SERVED	MFG & MODEL	TYPE	CFM	THROAT (AREA)	SP (IN)	WEIGHT (LB)	CURB CAP		NOTES
									WIDTH (IN)	LENGTH (IN)	
AR–74012	ROOF	ELEVATOR SHAFT	GREENHECK PEV400	RELIEF	3000	10 SQ FT	0.01	495	38	38	1,2,3,4

NOTES:
1. BIRD SCREEN. 2. 24" HIGH CURB. 3. KYNAR COATING. 4. 120V, SINGLE PHASE SMOKE DAMPER ACTUATOR, FAIL OPEN WITH OPEN OR CLOSED INDICATOR.

PACKAGED TERMINAL HEAT PUMP SCHEDULE

MARK No.	LOCATION	AREA SERVED	MFG & MODEL	OA CFM	CFM	COOL (BTUH)	EER	HEAT (BTUH)	ELECTRIC HEAT (KW)	ELECTRIC	
										V/PH/HZ	OPD(AMPS)
PTHP–74013	ADMIN BUILDING	STAIR WELL	GEAZ61H09DABCD	70	360	9400	12.7	8300	2.45	208/1/60	15

NO.	DATE	ISSUED FOR	BY
1	4/1/14	100% QA COMMENTS	H.J.V.

DESIGNED B.L.S.
DRAWN C.M.S.
CHECKED B.L.S.
PROJ. ENGR. G.A.B.

BERNARD L. STEIGER P.E.
No. 49808

HAZEN AND SAWYER
Environmental Engineers & Scientists
4000 Hollywood Boulevard, Suite 750N
Hollywood, Florida 33021
Certificate of Authorization Number: 2771

SCALE –

CLIENTS PROJECT: –
ENGINEERS PROJECT: 44238–004
CAD REFERENCE: 44238–004BP3–H06

NORTH MIAMI FLORIDA
CITY OF NORTH MIAMI
PUBLIC WORKS UTILITIES

WINSON WATER TREATMENT PLANT
BID PACKAGE 3: WTP REHABILITATION
HVAC SCHEDULES

DATE: JUNE 2014
SHEET: 315 OF 335
DRAWING: H–06

PERMITTING

PLOT DATE: 6/10/2014 2:45 PM BY: HSCAJI
XREFs= ..\Tblock\44238–004–BP3–TB
File = H:\44238–004\Drawings\Bid Package 3 – WTP Rehab\Hvac\44238–004BP3–H06 Saved by HsCaJi2 Save date = 6/9/2014 8:01 PM

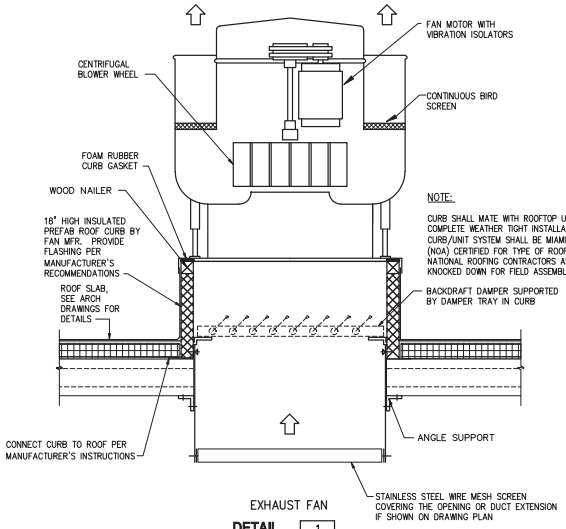

NOTE:

CURB SHALL MATE WITH ROOFTOP UNIT TO PROVIDE SUPPORT AND COMPLETE WEATHER TIGHT INSTALLATION WHEN PROPERLY INSTALLED. CURB/UNIT SYSTEM SHALL BE MIAMI-DADE NOTICE OF ACCEPTANCE (NOA) CERTIFIED FOR TYPE OF ROOFTOP UNIT AND BE APPROVED BY NATIONAL ROOFING CONTRACTORS ASSOCIATION. CURB SHALL SHIP KNOCKED DOWN FOR FIELD ASSEMBLY.

EXHAUST FAN

DETAIL 1 / –
N.T.S.

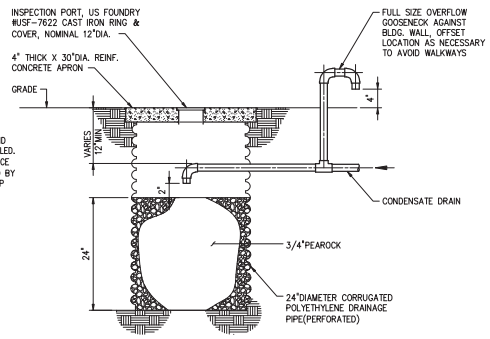

DRY WELL

DETAIL 2 / –
N.T.S.

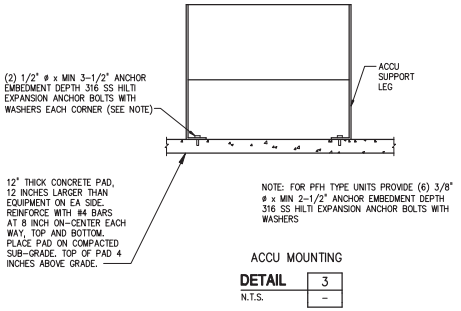

ACCU MOUNTING

DETAIL 3 / –
N.T.S.

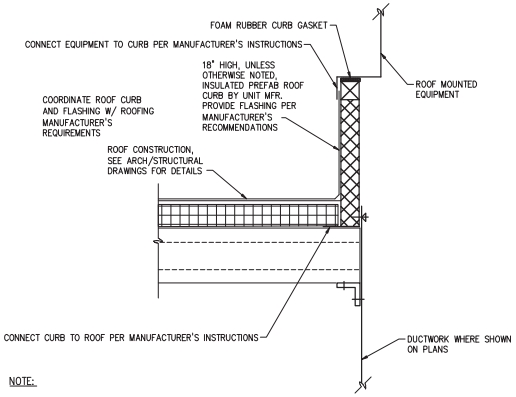

NOTE:

CURB SHALL MATE WITH ROOFTOP UNIT TO PROVIDE SUPPORT AND COMPLETE WEATHER TIGHT INSTALLATION WHEN PROPERLY INSTALLED. CURB/UNIT SYSTEM SHALL BE MIAMI-DADE NOTICE OF ACCEPTANCE (NOA) CERTIFIED FOR TYPE OF ROOFTOP UNIT AND BE APPROVED BY NATIONAL ROOFING CONTRACTORS ASSOCIATION. CURB SHALL SHIP KNOCKED DOWN FOR FIELD ASSEMBLY.

ROOF CURB

DETAIL 4 / –
N.T.S.

NOTES:
1. ALLOW SUFFICIENT SPACE BELOW DRAIN PAN FOR TRAP
2. PITCH DRAIN FOR PROPER RUNOFF.
3. MANUALLY PRIME FILL TRAP BEFORE START-UP TO FORM INITIAL DRAIN SEAL.
4. SUPPORT LENGTHY DRAIN LINES TO PREVENT SAG AND CONDENSATE OVERFLOW.

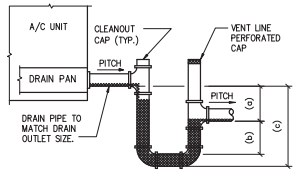

DRAW THROUGH COIL (NEGATIVE PRESSURE):

(a) 1 INCH FOR EACH INCH OF NEGATIVE PRESSURE PLUS 1 INCH (NEGATIVE STATIC PRESSURE IN INCHES WG WITH DIRTY FILTERS, COILS, AND MAXIMUM AIR FLOW)

(b) THIS DIMENSION IN INCHES MUST BE EQUAL TO MIN. 1/2 OF THE (a) ABOVE

(c) EQUALS (a) + (b) + PIPE DIA. + + INSULATION

BLOW THROUGH COIL (POSITIVE PRESSURE):

(a) 1 INCH MINIMUM

(b) 1 INCH PLUS THE TOTAL UNIT STATIC PRESSURE (POSITIVE STATIC PRESSURE IN INCHES WG)

(c) EQUALS (a) + (b) + PIPE DIA. + + INSULATION

THIS STANDARD DETAIL MUST BE REVIEWED AND SITE ADAPTED BY CONTRACTOR PRIOR TO USE FOR FINAL EQUIPMENT.

CONDENSATE DISPOSAL

DETAIL 5 / –
N.T.S.

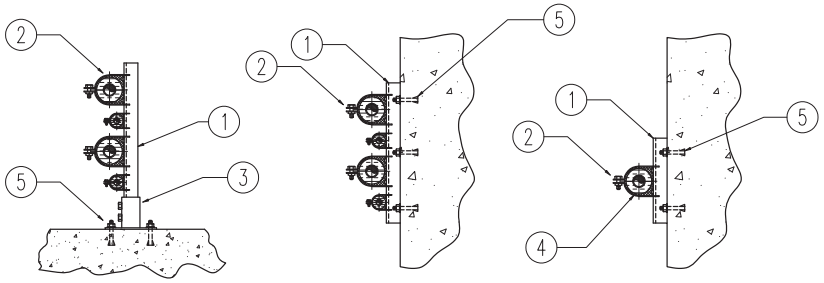

FLOOR/SLAB SUPPORT

WALL SUPPORT

WALL SUPPORT CONDENSATE

KEYED NOTES:
1. STAINLESS STEEL CHANNEL, B-LINE B22 OR EQUAL.
2. INSULATED REFRIGERANT TUBE CLAMP, B-LINE ARMIFIX OR EQUAL.
3. STAINLESS STEEL POST BASE, B-LINE B280SQ OR EQUAL.
4. INSULATED PVC CONDENSATE DRAIN PIPE, SUPPORT SEPARATELY TO ALLOW MINIMUM SLOPE OF 1/4" PER FOOT.
5. 3/8" DIAMETER STAINLESS STEEL EXPANSION ANCHOR, NUT AND WASHER, TYP.
6. PIPE SUPPORT SPACING PER FLORIDA MECHANICAL CODE TABLE 305.4.
7. SEE PLANS FOR NUMBER OF CIRCUITS REQUIRED.

PIPE SUPPORT

DETAIL 6 / –
N.T.S.

NO.	DATE	ISSUED FOR	BY

DESIGNED B.L.S.
DRAWN C.M.S.
CHECKED B.L.S.
PROJ. ENGR. G.A.B.

BERNARD L. STEIGER P.E.
No. 49808

HAZEN AND SAWYER
Environmental Engineers & Scientists
4000 Hollywood Boulevard, Suite 750N
Hollywood, Florida 33021
Certificate of Authorization Number: 2771

SCALE –

CLIENTS PROJECT: –
ENGINEERS PROJECT: 44238-004
CAD REFERENCE: 44238-004BP3-H07

NORTH MIAMI FLORIDA
CITY OF NORTH MIAMI
PUBLIC WORKS UTILITIES

WINSON WATER TREATMENT PLANT
BID PACKAGE 3: WTP REHABILITATION
HVAC DETAILS SHEET 1

DATE: JUNE 2014
SHEET: 316 OF 335
DRAWING: H-07

PERMITTING

PLOT DATE: 6/10/2014 2:46 PM BY: HSCALI
XREFs= .\Tblock\44238-004-BP3-TB
File = H:\44238-004\Drawings\Bid Package 3 - WTP Rehab\Hvac\44238-004BP3-H07 Saved by Bernard Save date = 6/9/2014 7:49 PM

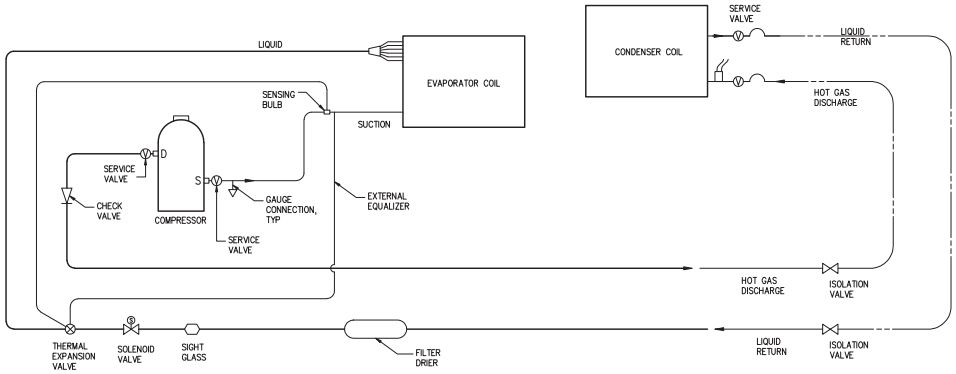

NOTE: SEE PLANS FOR NUMBER OF REFRIGERATION CIRCUITS REQUIRED. SINGLE REFRIGERATION CIRCUIT SHOWN FOR CLARITY.

REFRIGERANT PIPING INDOOR COMPRESSORS

DETAIL 7
N.T.S. –

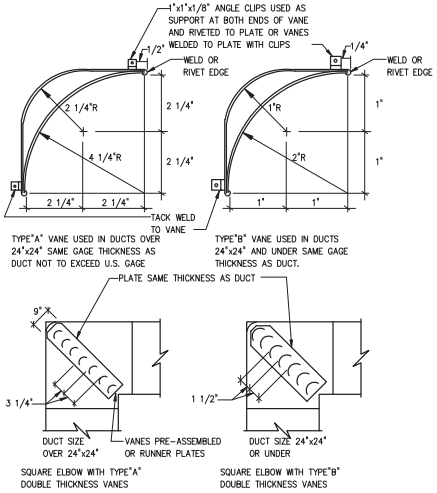

TURNING VANES

DETAIL 8
N.T.S. –

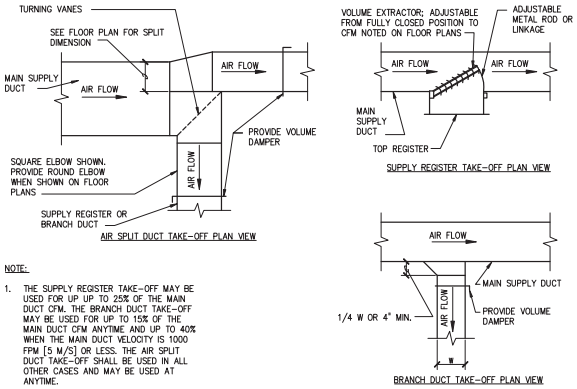

NOTE:

1. THE SUPPLY REGISTER TAKE-OFF MAY BE USED FOR UP UP TO 25% OF THE MAIN DUCT CFM. THE BRANCH DUCT TAKE-OFF MAY BE USED FOR UP TO 15% OF THE MAIN DUCT CFM ANYTIME AND UP TO 40% WHEN THE MAIN DUCT VELOCITY IS 1000 FPM [5 M/S] OR LESS. THE AIR SPLIT DUCT TAKE-OFF SHALL BE USED IN ALL OTHER CASES AND MAY BE USED AT ANYTIME.

DUCTWORK

DETAIL 9
N.T.S. –

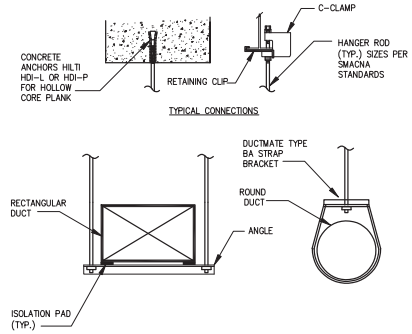

DUCT HANGER SUPPORT

DETAIL 10
N.T.S. –

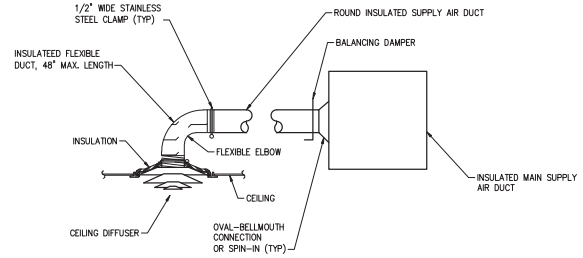

DUCT RUN OUT

DETAIL 11
N.T.S. –

PLOT DATE: 6/10/2014 2:46 PM BY: HSCALII

NO.	DATE	ISSUED FOR	BY

XREFs= ..\Tblock\44238-004-BP3-TB

DESIGNED B.L.S.
DRAWN C.M.S.
CHECKED B.L.S.
PROJ. ENGR. G.A.B.

BERNARD L. STEIGER P.E.
No. 49808

HAZEN AND SAWYER
Environmental Engineers & Scientists
4000 Hollywood Boulevard, Suite 750N
Hollywood, Florida 33021
Certificate of Authorization Number: 2771

SCALE –

CLIENTS PROJECT: –
ENGINEERS PROJECT: 44238-004
CAD REFERENCE: 44238-004BP3-H08

NORTH MIAMI FLORIDA
CITY OF NORTH MIAMI
PUBLIC WORKS UTILITIES

WINSON WATER TREATMENT PLANT
BID PACKAGE 3: WTP REHABILITATION
HVAC DETAILS SHEET 2

DATE: JUNE 2014
SHEET: 317 OF 335
DRAWING: H-08

PERMITTING

File = H:\44238-004\Drawings\Bid Package 3 - WTP Rehab\Hvac\44238-004BP3-H08 Saved by Bernard Save date = 6/9/2014 8:53 PM

ABBREVIATIONS

AC	ACETYLENE GAS
AD	AREA DRAIN
AR	ARGON GAS
AFF	ABOVE FINISHED FLOOR
AV	ACID VENT
AW	ACID WASTE
BFG	BELOW FINISHED GRADE
BFP	BACKFLOW PREVENTER
BFV	BUTTERFLY VALVE
BLDG	BUILDING
CA	COMPRESSED AIR
CC	CENTER TO CENTER
CFM	CUBIC FEET PER MINUTE
CI	CAST IRON
CO	CLEAN OUT
COL	COLUMN
CPLG	COUPLING
CF	CUBIC FEET
CU	COPPER
CV	CHECK VALVE
CW	COLD WATER
DFU	DRAINAGE FIXTURE UNIT
DI	DUCTILE IRON
DIA	DIAMETER
DN	DOWN TO FLOOR BELOW
DR	DRAIN
DW	DEIONIZED WATER
DWV	DRAIN, WASTE AND VENT
DROP	DROP IN EXISTING STORY
EL	ELEVATION
ESE	EMERGENCY SHOWER AND EYEWASH
EW	EMERGENCY EYEWASH
FAI	FRESH AIR INLET
FD1	FLOOR DRAIN TYPE 1
FLR	FLOOR
FT	FEET
FU	FIXTURE UNIT
FL	FLOOR
FLG	FLANGE
FM	FACTORY MUTUAL
FS	FLOW SWITCH
GAS	NATURAL GAS
GAL	GALLON
GPM	GALLONS PER MINUTE
GAL	GALLON
GC	GENERAL CONTRACTOR
GCO	GRADE CLEAN OUT
HB	HOSE BIBB
HPLW	HIGH PRUITY LAB WATER
HR	HOSE REEL
HW	HOT WATER
HWC	HOT WATER RECIRCULATION
HWH	HOT WATER HEATER
GS	GALVANIZED STEEL
GV	GATE VALVE
HP	HORSEPOWER
IE	INVERT ELEVATION
IN	INCH
IW	INDIRECT WASTE
IRI	INDUSTRIAL RISK INSURANCE
JST	JOIST
LAV1	LAVATORY TYPE 1
LB	POUND
MAX	MAXIMUM
MIN	MINIMUM
MR	MOP RECEPTOR
MSB	MOP SERVICE BASIN
NFPA	NATIONAL FIRE PROTECTION ASSOCIATION
NO	NITROUS OXIDE GAS
NPW	NON POTABLE WATER
NRS	NON RISING STEM
NTS	NOT TO SCALE
OD	OUTSIDE DIAMETER
OSY	OUTSIDE SCREW AND YOKE
PIV	POST INDICATOR VALVE
PSI	POUNDS PER SQUARE INCH
PSIG	POUNDS PER SQUARE INCH GAGE
PVC	POLY VINYL CHLORIDE
PW	POTABLE WATER
RD1	ROOF DRAIN TYPE 1
RISE	RISE IN EXISTING STORY
RPM	REVOLUTIONS PER MINUTE
RPZ	REDUCED PRESSURE ZONE BFP
SAN	SANITARY
SCH	SCHEDULE
SD	STORM DRAIN
SF	SQUARE FOOT
SPD	SUMP PUMP DISCHARGE
SS	SANITARY SEWER
TYP	TYPICAL
TW	TEMPERED WATER
UON	UNLESS OTHERWISE NOTED
UP	UP TO FLOOR ABOVE
UL	UNDERWRITERS LABORATORY
UR	URINAL
V	VENT
VA	VALVE
VAC	VACUUM
VB	VACUUM BREAKER
VIV	VALVE IN VERTICAL
VTR	VENT THROUGH ROOF
W	WASTE
WC1	WATER CLOSET TYPE 1
WCO	WALL CLEAN OUT
WFD	WATER FLOW DETECTOR
WFU	WATER FIXTURE UNIT
WH	WALL HYDRANT
WHA	WATER HAMMER ARRESTER
WFS	WATER FLOW SWITCH
WT	WEIGHT

SYMBOLS

- SAN OR WASTE PIPE ABOVE GROUND OR FLOOR
- SAN OR WASTE PIPE BELOW GROUND OR FLOOR
- V — VENT
- POTABLE/COLD WATER
- TEMPERED WATER RECIRCULATION
- HWR — HOT WATER RE-CIRCULATION
- HOT WATER
- AR — ARGON GAS
- AG — ACETYLENE GAS
- CA — COMPRESSED AIR
- HIGH PURITY LABORATORY WATER (HPLW)
- GAS — NATURAL GAS
- PG — PROPANE GAS
- TEMPERED WATER (TW)
- GATE VALVE
- GLOBE VALVE
- GAS COCK OR PLUG VALVE
- BUTTERFLY VALE
- CHECK VALVE
- BACKFLOW PREVENTER DOUBLE CHECK VALVE
- BACKFLOW PREVENTER REDUCED PRESSURE ZONE (RPZ)
- METER
- PIPE CAP
- AUTOMATIC CONTROL VALVE 2-WAY
- AUTOMATIC CONTROL VALVE 3-WAY
- SOLENOID OPERATED VALVE
- BALL VALVE (BV)
- PIPING ELBOW, 90 TURNED DOWN
- PIPING ELBOW, 90 TURNED UP
- PIPING TEE, OUTLET TURNED DOWN
- PIPING TEE, OUTLET TURNED UP
- PRESSURE GAGE WITH SHUTOFF COCK (BALL VALVE)
- THERMOMETER
- FD OR RD — FLOOR OR ROOF DRAIN
- P-TRAP
- FLOOR CLEAN OUT
- CIRCULATING PUMP
- STRAINER WYE TYPE WITH BALL VALVE BLOW OFF

PLUMBING GENERAL NOTES

1. THE ENTIRE PLUMBING SYSTEM SHALL BE IN ACCORDANCE WITH THE PLUMBING CODE REGULATIONS AND LOCAL PLUMBING INSPECTOR.
2. THE PIPING INDICATED ON THESE PLANS ARE DIAGRAMMATIC. ALL WORK SHALL BE COORDINATED WITH ALL OTHER TRADES PRIOR TO INSTALLATION. CONTRACTOR SHALL COORDINATE ROUTING OF ALL PIPING WITH EXISTING CONDITIONS AND SHALL PROVIDE ANY NECESSARY OFFSETS, REROUTING, TEES, ELBOWS, ETC. REQUIRED FOR A COMPLETE AND COORDINATED INSTALLATION.
3. THE CONTRACTOR SHALL OBTAIN AND PAY ALL FEES RELATED TO PERMITTING, AND INSPECTIONS.
4. CONTRACTOR SHALL COORDINATE ANY PLUMBING OR PIPING SYSTEM SHUT DOWN WITH THE OWNER 48 HOURS IN ADVANCE. SEE SPECS FOR COORDINATION REQUIREMENTS. VERIFY EXISTING WATER PRESSURE AT POINT OF NEW CONNECTION. PROVIDE BOOSTER PUMP AS NECESSARY TO PROVIDE ADEQUATE WATER PRESSURE TO FURTHEST FIXTURE. NEW CONNECTION POINT SHALL BE AT PIPE OF EQUAL SIZE OR GREATER THEN NEW PIPE.
5. ALL PLUMBING AND PIPING SYSTEMS SHALL BE SUPPORTED AS REQUIRED BY CODE REQUIREMENTS AND PER MANUFACTURERS RECOMMENDATIONS.
6. ALL PLUMBING FIXTURES SHALL BE INSTALLED IN ACCORDANCE WITH THE MANUFACTURERS WRITTEN INSTRUCTIONS. CONTRACTOR SHALL MAINTAIN ON-SITE THE WRITTEN INSTRUCTIONS FOR THE INSPECTOR'S REVIEW.
7. ALL PIPING PENETRATIONS THROUGH NEW, EXISTING WALL, OR FLOOR SHALL BE SEALED TO EQUAL THE RATING OF THE NEW, EXISTING WALL OR FLOOR.
8. THE NEW PLUMBING SYSTEM SHALL BE TESTED AS REQUIRED BY CODE OR BY THE REQUIREMENTS OF THE LOCAL PLUMBING INSPECTOR.
9. THE ENTIRE DOMESTIC WATER SYSTEM SHALL BE DISINFECTED IN ACCORDANCE WITH THE LOCAL HEALTH DEPARTMENT REQUIREMENTS.
10. ROUTE ALL PIPING CONCEALED ABOVE CEILINGS, WITHIN WALLS OR IN CHASES EXCEPT AS SPECIFICALLY NOTED, OR IN MECHANICAL ROOMS.
11. SEE ARCHITECTURAL DRAWINGS FOR FIXTURE LOCATIONS AND MOUNTING HEIGHTS.
12. CONTRACTOR SHALL PROVIDE AND INSTALL WHEN REQUIRED BY CODE AN AIR GAP SERVING INDIVIDUAL FIXTURES, DEVICES, APPLIANCES OR APPARATUS.
13. CONTRACTOR SHALL PROVIDE WATER STOPS AT EACH FIXTURE.
14. SIZE AND LOCATION OF CLEANOUTS (AS WELL AS ALL PLUMBING WORK) SHALL BE IN ACCORDANCE WITH THE PLUMBING CODE.
15. PATCH ALL SURFACES DISTURBED DURING THE CONSTRUCTION OF PLUMBING COMPONENTS TO MATCH ADJACENT SURFACES. WORK SHALL BE DONE ONLY BY WORKMAN SKILLED IN THE TRADE INVOLVED AND TO THE SATISFACTION OF THE OWNER'S REPRESENTATIVE.
16. ALL CONCEALED VALVES, WATER HAMMER ARRESTORS, CLEANOUTS, ETC., CONCEALED IN WALLS SHALL BE PROVIDED WITH AN ACCESS PANEL SUCH AS ZURN MODEL ZN-1460 OR APPROVED EQUAL.
17. ALL CONCEALED PIPING IN CHASE AREAS SHALL BE SUPPORTED WITH A PIPING SUPPORT SYSTEM SUCH AS SUMNER POSIFIX, STAKFIX AND CHANNEL OR APPROVED EQUAL.
18. PLUMBING WATER SUPPLY PIPING SHALL BE COPPER THROUGHOUT.
19. INSULATE ALL COLD AND HOT WATER PIPING W/ARMAFLEX PIPE INSULATION AS FOLLOWS: 1/2" TO 1-1/4" PIPE - 1/2" THICK INSULATION AND 1-1/2" TO 4" PIPE - 1" THICK INSULATION. SEAL ALL JOINTS AND SEAMS VAPOR TIGHT. INSULATION ID = PIPE OD.
20. LABORATORY PIPING SHALL BE CPVC DRAINAGE TYPE, NSF CERTIFIED FOR CORROSIVE WASTE USE, SPEARS LAB WASTE SYSTEM, OR EQUAL.
21. LABORATORY VENT PIPING SHALL BE CPVC DRAINAGE TYPE, NSF CERTIFIED FOR CORROSIVE WASTE USE, SPEARS LAB WASTE SYSTEM, OR EQUAL.
22. DO NOT ROUTE PLUMBING PIPE OVER OR IN FRONT OF ELECTRICAL PANELS, BREAKERS, ETC.
23. MINIMUM SLOPE OF DRAIN PIPES SHALL BE 1/4" PER FOOT FOR PIPE SIZES EQUAL TO OR LESS THAN 2-1/2" AND 1/8" PER FOOT FOR 3" AND LARGER UNLESS OTHERWISE NOTED.
24. PIPE HANGERS SHALL BE EPOXY COATED AND HANGER RODS ELECTRO-PLATED.
25. PIPING INDICATED AS RISE OR DROP INDICATES PIPING ROUTED WITHIN EXISTING BUILDING STORY. PIPING INDICATED AS DN OR UP INDICATES PIPING ROUTED TO BUILDING STORY BELOW OR ABOVE.
26. SEE SPECIFICATIONS FOR ADDITIONAL REQUIREMENTS.
27. THE SYMBOLS AND ABBREVIATIONS LIST ON THIS SHEET IS A COMPREHENSIVE STANDARD GUIDE INTENDED FOR GENERAL USE ON ALL PROJECTS. THEREFORE NOT ALL THE SYMBOLS AND ABBREVIATIONS CONTAINED IN THIS LIST ARE NECESSARILY USED ON THIS PARTICULAR PROJECT AND SHOULD BE USED FOR CLARIFICATION ONLY.

PIPE MATERIALS ARE SPECIFIED IN SECTIONS 15000, PIPING-GENERAL AND 15410, PLUMBING-PIPING AND PIPE INSULATION SYSTEMS

NO.	DATE	ISSUED FOR	BY

DESIGNED B.L.S.
DRAWN C.M.S.
CHECKED B.L.S.
PROJ. ENGR. G.A.B.

BERNARD L. STEIGER P.E.
No. 49808

HAZEN AND SAWYER
Environmental Engineers & Scientists
4000 Hollywood Boulevard, Suite 750N
Hollywood, Florida 33021
Certificate of Authorization Number: 2771

SCALE –

CLIENTS PROJECT: –
ENGINEERS PROJECT: 44238-004
CAD REFERENCE: 44238-004BP3-P01

NORTH MIAMI FLORIDA
CITY OF NORTH MIAMI
PUBLIC WORKS UTILITIES

WINSON WATER TREATMENT PLANT
BID PACKAGE 3: WTP REHABILITATION
PLUMBING SYMBOLS, ABBREVIATIONS, AND NOTES

DATE: JUNE 2014
SHEET: 318 OF 335
DRAWING: P-01

PERMITTING

PLOT DATE: 6/10/2014 3:23 PM BY: HSCALIT
XREFs= ..\block\44238-004-BP3-TB
File = H:\44238-004\Drawings\Bid Package 3 - WTP Rehab\Plumbing\44238-004BP3-P01 Saved by bsteiger Save date = 6/9/2014 9:16 PM

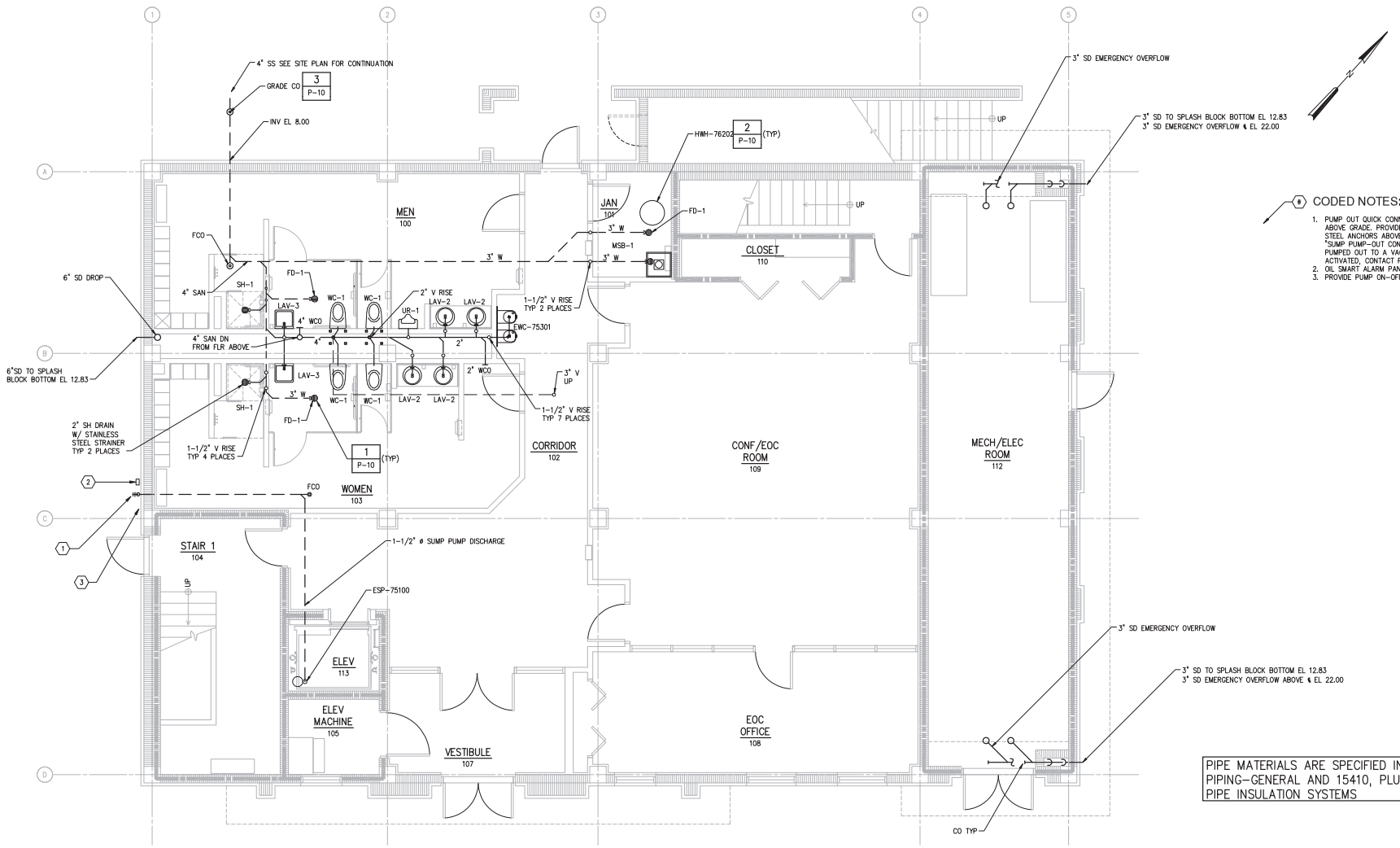

FIRST FLOOR SANITARY PLAN
1/4" = 1'-0"

NO.	DATE	ISSUED FOR	BY

DESIGNED B.L.S.
DRAWN C.M.S.
CHECKED B.L.S.
PROJ. ENGR. G.A.B.

BERNARD L. STEIGER P.E.
No. 49808

HAZEN AND SAWYER
Environmental Engineers & Scientists
4000 Hollywood Boulevard, Suite 750N
Hollywood, Florida 33021
Certificate of Authorization Number: 2771

SCALE –

CLIENTS PROJECT: –
ENGINEERS PROJECT: 44238-004
CAD REFERENCE: 44238-004BP3-P02

NORTH MIAMI FLORIDA
CITY OF NORTH MIAMI
PUBLIC WORKS UTILITIES

WINSON WATER TREATMENT PLANT
BID PACKAGE 3: WTP REHABILITATION
NEW ADMINISTRATION BUILDING
FIRST FLOOR SANITARY PLAN

DATE: JUNE 2014
SHEET: 319 OF 335
DRAWING: P-02

PERMITTING

PLOT DATE: 6/10/2014 3:24 PM BY: HSCALII

XREFs= ..\Tblock\44238-004-BP3-TB,..\Base-BP3\A-BP3-Admin-Plan-Bottom,..\Base-BP3\P-BP3-Admin-Plan-Bottom,..\Base-BP3\A-BP3-Admin-Plan-Col-Grid

File = H:\44238-004\Drawings\Bid Package 3 - WTP Rehab\Plumbing\44238-004BP3-P02 Saved by bsteiger Save date = 6/9/2014 6:28 PM

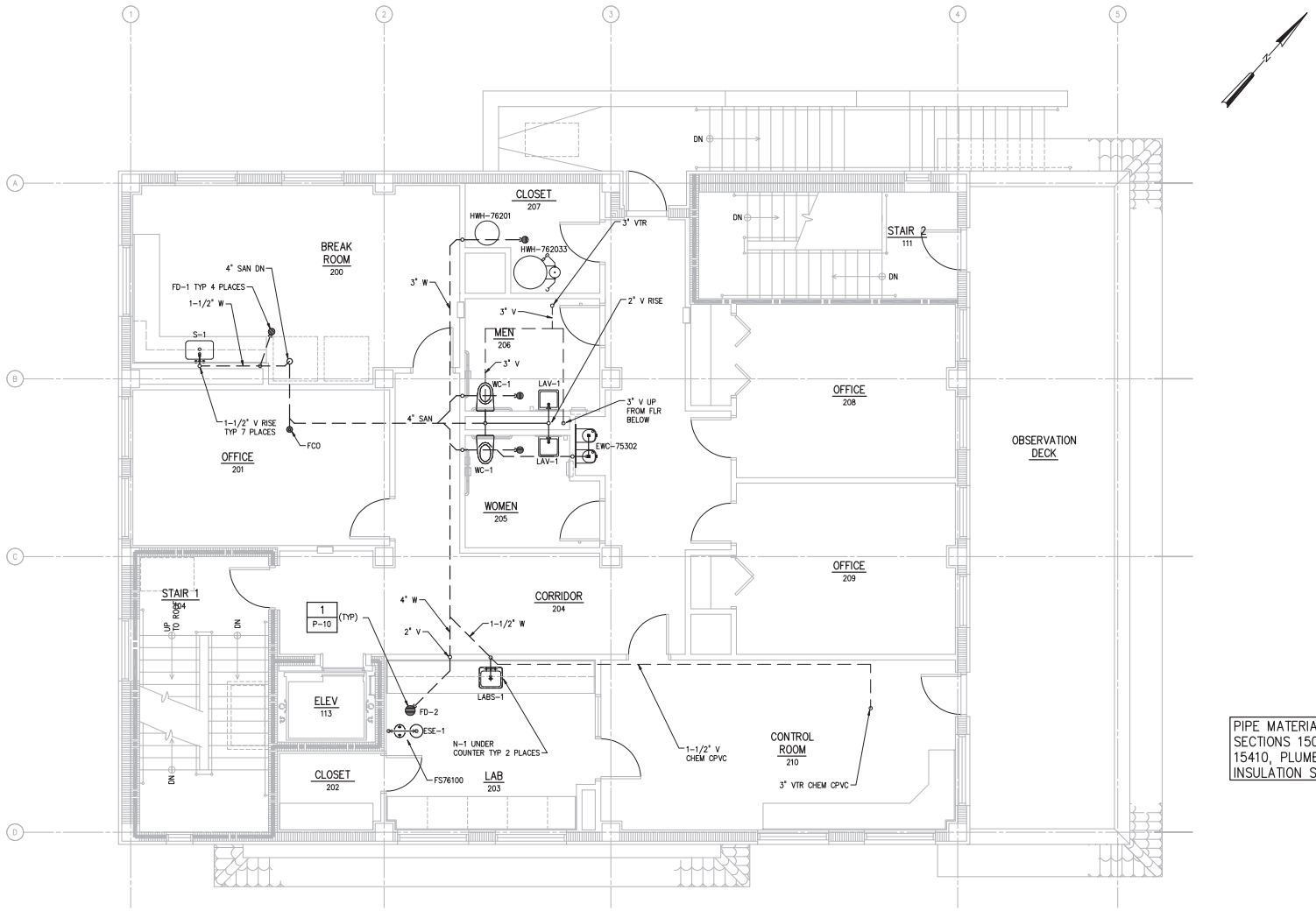

PIPE MATERIALS ARE SPECIFIED IN SECTIONS 15000, PIPING-GENERAL AND 15410, PLUMBING-PIPING AND PIPE INSULATION SYSTEMS

SECOND FLOOR SANITARY PLAN

1/4" = 1'-0"

1/4"=1'-0" 1 0 1 2 3 7'

PLOT DATE: 6/10/2014 3:24 PM BY: HSCALI

NO.	DATE	ISSUED FOR	BY

DESIGNED B.L.S.
DRAWN C.M.S.
CHECKED B.L.S.
PROJ. ENGR. G.A.B.

BERNARD L. STEIGER P.E.
No. 49808

HAZEN AND SAWYER
Environmental Engineers & Scientists
4000 Hollywood Boulevard, Suite 750N
Hollywood, Florida 33021
Certificate of Authorization Number: 2771

SCALE –

CLIENTS PROJECT: –
ENGINEERS PROJECT: 44238-004
CAD REFERENCE: 44238-004BP3-P03

NORTH MIAMI FLORIDA
CITY OF NORTH MIAMI
PUBLIC WORKS UTILITIES

WINSON WATER TREATMENT PLANT
BID PACKAGE 3: WTP REHABILITATION
NEW ADMINISTRATION BUILDING
SECOND FLOOR SANITARY PLAN

DATE: JUNE 2014
SHEET: 320 OF 335
DRAWING: P-03

PERMITTING

XREFs= ..\Tblock\44238-004-BP3-TB,..\Base-BP3\A-BP3-Admin-Plan-Top,..\Base-BP3\P-BP3-Admin-Plan-Top,..\Base-BP3\A-BP3-Admin-Plan-Col-Grid

File = H:\44238-004\Drawings\Bid Package 3 - WTP Rehab\Plumbing\44238-004BP3-P03 Saved by bsteiger Save date = 6/9/2014 9:05 PM

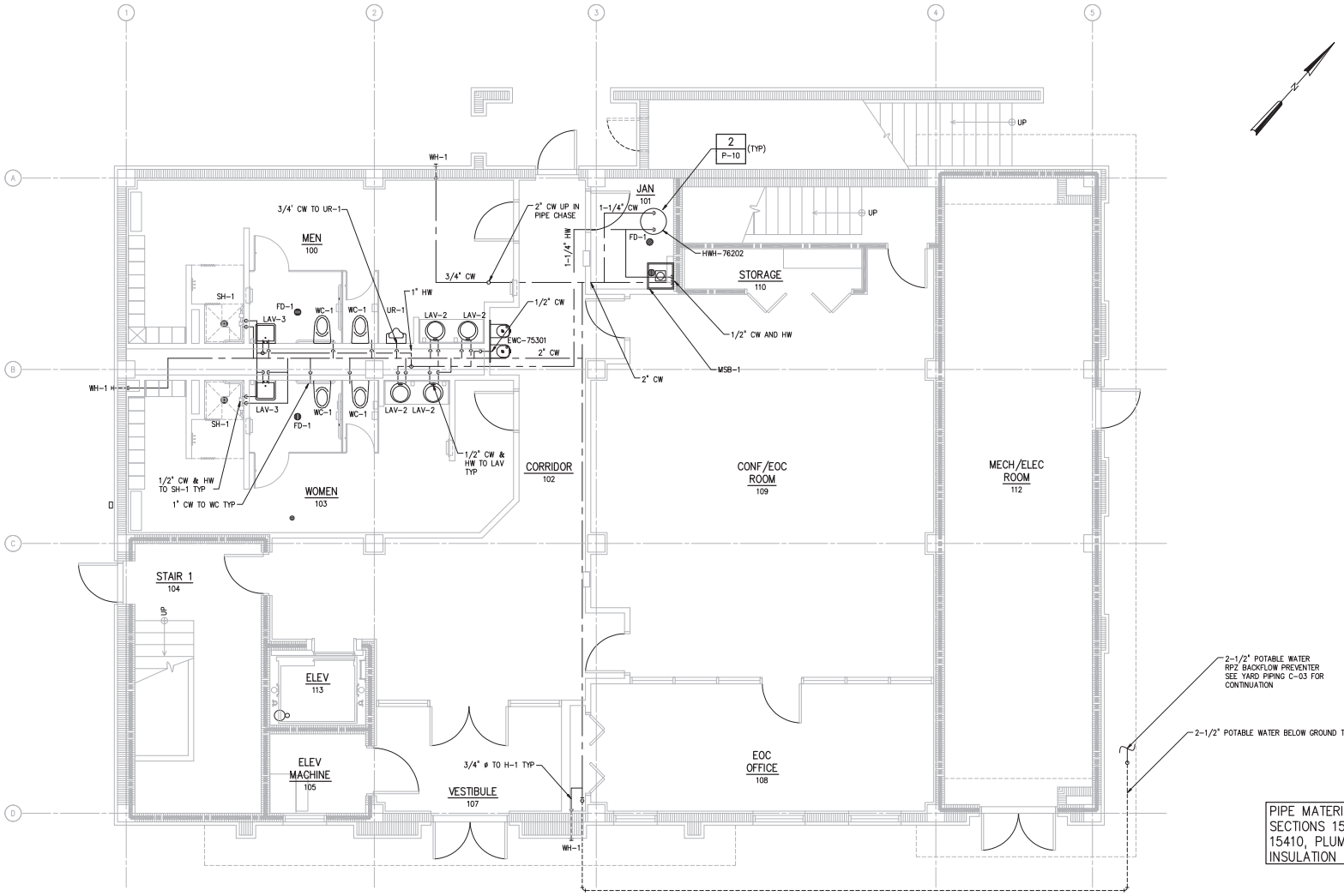

PIPE MATERIALS ARE SPECIFIED IN SECTIONS 15000, PIPING–GENERAL AND 15410, PLUMBING–PIPING AND PIPE INSULATION SYSTEMS

FIRST FLOOR POTABLE WATER PLAN
1/4" = 1'-0"

1/4"=1'-0" 1 0 1 2 3 7'

NO.	DATE	ISSUED FOR	BY

DESIGNED B.L.S.
DRAWN C.M.S.
CHECKED B.L.S.
PROJ. ENGR. G.A.B.

BERNARD L. STEIGER P.E.
No. 49808

HAZEN AND SAWYER
Environmental Engineers & Scientists
4000 Hollywood Boulevard, Suite 750N
Hollywood, Florida 33021
Certificate of Authorization Number: 2771

SCALE –

CLIENTS PROJECT: –
ENGINEERS PROJECT: 44238-004
CAD REFERENCE: 44238-004BP3-P04

NORTH MIAMI FLORIDA
CITY OF NORTH MIAMI
PUBLIC WORKS UTILITIES

WINSON WATER TREATMENT PLANT
BID PACKAGE 3: WTP REHABILITATION
NEW ADMINISTRATION BUILDING
FIRST FLOOR POTABLE WATER PLAN

DATE: JUNE 2014
SHEET: 321 OF 335
DRAWING: P-04

PERMITTING

PLOT DATE: 6/10/2014 3:29 PM BY: HSCALI

XREFs= ..\Tblock\44238-004-BP3-TB,..\Base-BP3\P-BP3-Admin-Plan-Bottom,..\Base-BP3\A-BP3-Admin-Plan-Bottom,..\Base-BP3\A-BP3-Admin-Plan-Col-Grid

File = H:\44238-004\Drawings\Bid Package 3 - WTP Rehab\Plumbing\44238-004BP3-P04 Saved by Bernard Save date = 6/9/2014 7:36 PM

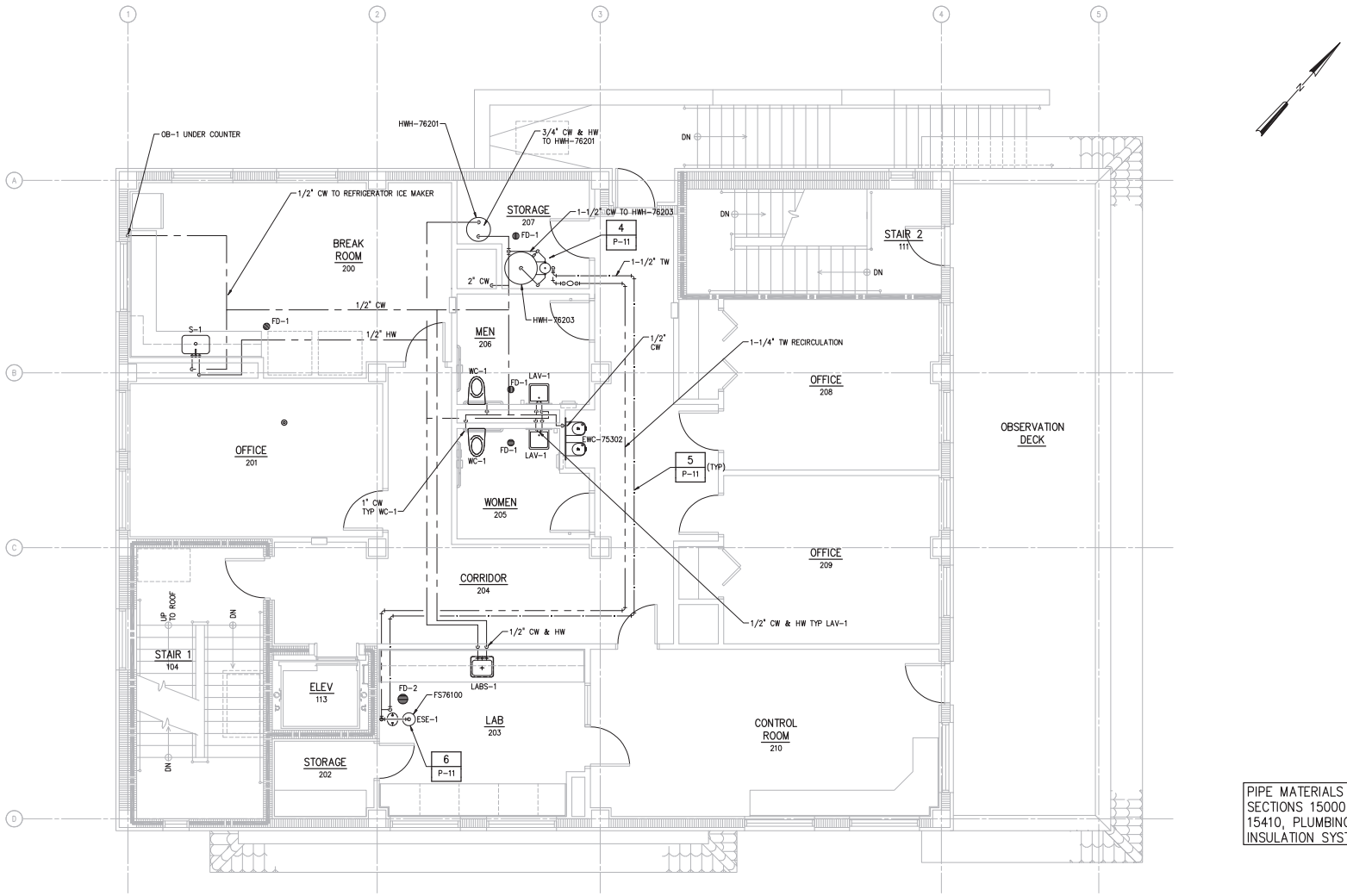

PIPE MATERIALS ARE SPECIFIED IN SECTIONS 15000, PIPING-GENERAL AND 15410, PLUMBING-PIPING AND PIPE INSULATION SYSTEMS

SECOND FLOOR POTABLE WATER PLAN
1/4" = 1'-0"

1/4"=1'-0" 1 0 1 2 3 7'

NO.	DATE	ISSUED FOR	BY

DESIGNED B.L.S.
DRAWN C.M.S.
CHECKED B.L.S.
PROJ. ENGR. G.A.B.

BERNARD L. STEIGER P.E.
No. 49808

HAZEN AND SAWYER
Environmental Engineers & Scientists
4000 Hollywood Boulevard, Suite 750N
Hollywood, Florida 33021
Certificate of Authorization Number: 2771

SCALE –

CLIENTS PROJECT: –
ENGINEERS PROJECT: 44238-004
CAD REFERENCE: 44238-004BP3-P05

NORTH MIAMI FLORIDA
CITY OF NORTH MIAMI
PUBLIC WORKS UTILITIES

WINSON WATER TREATMENT PLANT
BID PACKAGE 3: WTP REHABILITATION
NEW ADMINISTRATION BUILDING
SECOND FLOOR POTABLE WATER PLAN

DATE: JUNE 2014
SHEET: 322 OF 335
DRAWING: P-05

PERMITTING

PLOT DATE: 6/10/2014 3:23 PM BY: HSCALIT

XREFs= ..\Tblock\44238-004-BP3-TB,..\Base-BP3\P-BP3-Admin-Plan-Top,..\Base-BP3\A-BP3-Admin-Plan-Top,..\Base-BP3\A-BP3-Admin-Plan-Col-Grid

File = H:\44238-004\Drawings\Bid Package 3 - WTP Rehab\Plumbing\44238-004BP3-P05 Saved by Bernard Save date = 6/9/2014 8:23 PM

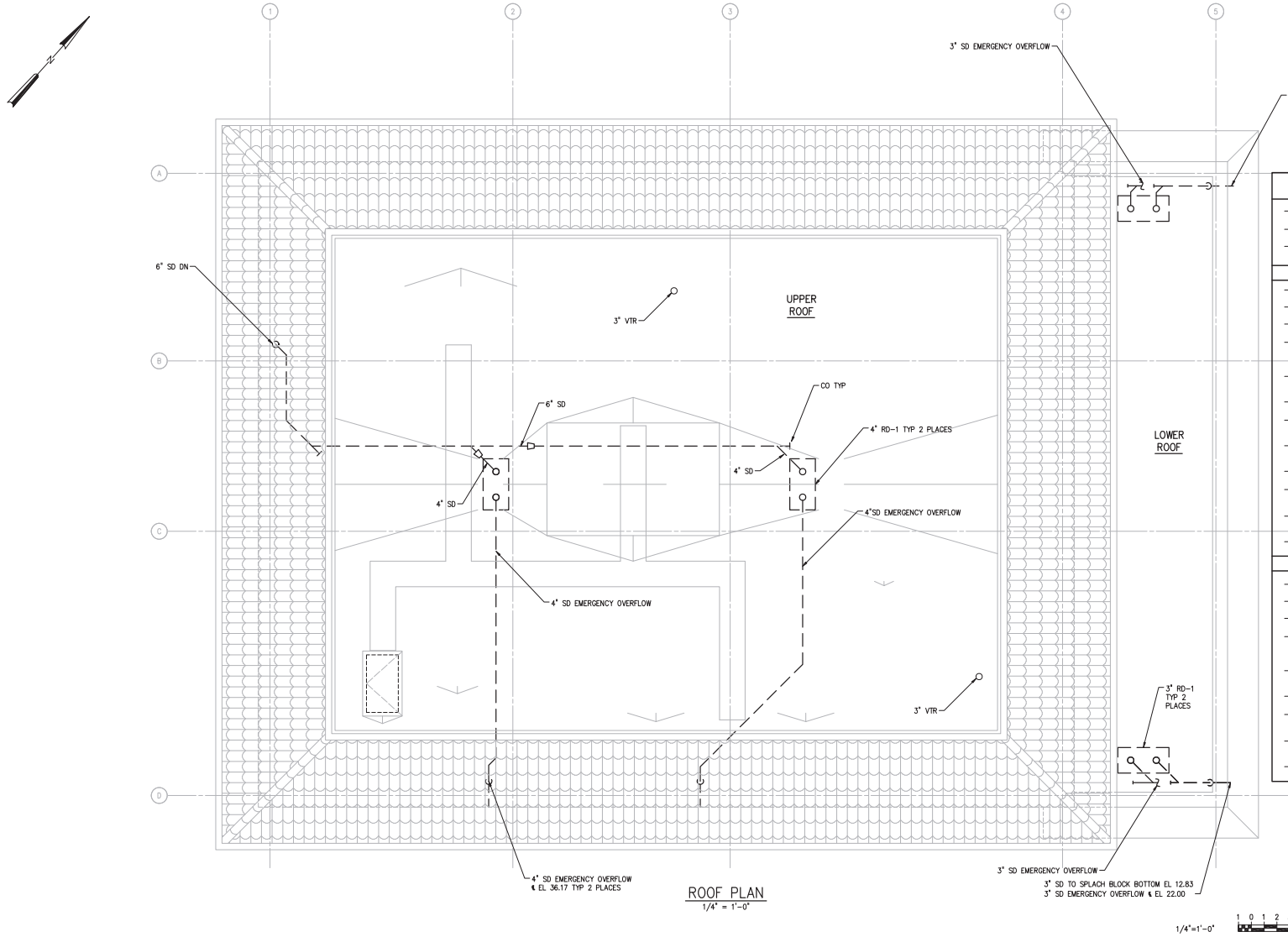

ROOF PLAN
1/4" = 1'-0"

ROOF DRAINAGE CALCULATION

- 5-INCH/HOUR DESIGN RAINFALL RATE
- MINIMUM DRAIN SLOPE = 1/8" PER FOOT
- SECONDARY ROOF DRAIN SYSTEM NEEDED PER SECTION 1107.1 (2010 FPC)

UPPER ROOF:

- HORIZONTAL ROOF AREA = 2,041 SQUARE FEET
- ONE HALF OF VERTICAL WALL AREA = 548 SQUARE FEET
- TOTAL DESIGN PROJECTED ROOF AREA = 2,589 SQUARE FEET
- TWO 4" DIAMETER HORIZONTAL STORM DRAINS AND TWO 4" DIAMETER HORIZONTAL OVERFLOW DRAINS, AREA PER DRAIN = 1,295 SQUARE FEET
- AREA ALLOWED PER 2010 FPC TABLE 1106.3 = 1,504 SQUARE FEET
- 1,504 SQUARE FEET > 1,295 SQUARE FEET, PROPOSED SIZE OK
- ONE COMBINED 6" DIAMETER HORIZONTAL STORM DRAIN, AREA = 2,589 SQUARE FEET
- AREA ALLOWED PER 2010 FPC TABLE 1106.3 = 4,280 SQUARE FEET
- 4,280 SQUARE FEET > 2,589 SQUARE FEET, PROPOSED SIZE OK
- ONE COMBINED 6" DIAMETER VERTICAL STORM DRAIN, AREA = 2,589 SQUARE FEET
- AREA ALLOWED PER 2010 FPC TABLE 1106.2(1) = 10,800 SQUARE FEET
- 10,800 SQUARE FEET > 2,589 SQUARE FEET, PROPOSED SIZE OK

LOWER ROOF:

- HORIZONTAL ROOF AREA = 517 SQUARE FEET
- ONE HALF OF VERTICAL WALL AREA = 478 SQUARE FEET
- TOTAL DESIGN PROJECTED ROOF AREA = 995 SQUARE FEET
- TWO 3" DIAMETER HORIZONTAL STORM DRAINS AND TWO 3" DIAMETER HORIZONTAL OVERFLOW DRAINS, AREA PER DRAIN = 498 SQUARE FEET
- AREA ALLOWED PER 2010 FPC TABLE 1106.3 = 657 SQUARE FEET
- 657 SQUARE FEET > 498 SQUARE FEET, PROPOSED SIZE OK
- TWO 3" DIAMETER VERTICAL STORM DRAINS, AREA PER DRAIN = 498 SQUARE FEET
- AREA ALLOWED PER 2010 FPC TABLE 1106.2(1) = 1,760 SQUARE FEET
- 1,760 SQUARE FEET > 498 SQUARE FEET, PROPOSED SIZE OK

PIPE MATERIALS ARE SPECIFIED IN SECTIONS 15000, PIPING-GENERAL AND 15410, PLUMBING-PIPING AND PIPE INSULATION SYSTEMS

NO.	DATE	ISSUED FOR	BY
1	4/1/14	100% QA COMMENTS	H.J.V.

DESIGNED B.L.S.
DRAWN C.M.S.
CHECKED B.L.S.
PROJ. ENGR. G.A.B.

BERNARD L. STEIGER P.E.
No. 49808

HAZEN AND SAWYER
Environmental Engineers & Scientists
4000 Hollywood Boulevard, Suite 750N
Hollywood, Florida 33021
Certificate of Authorization Number: 2771

SCALE –

CLIENTS PROJECT: –
ENGINEERS PROJECT: 44238-004
CAD REFERENCE: 44238-004BP3-P06

NORTH MIAMI FLORIDA
CITY OF NORTH MIAMI
PUBLIC WORKS UTILITIES

WINSON WATER TREATMENT PLANT
BID PACKAGE 3: WTP REHABILITATION
NEW ADMINISTRATION BUILDING
ROOF DRAINAGE PLAN

DATE: JUNE 2014
SHEET: 323 OF 335
DRAWING: P-06

PERMITTING

XREFs= ..\Block\44238-004-BP3-TB,..\Base-BP3\P-BP3-Admin-Plan-Roof,..\Base-BP3\A-BP3-Admin-Plan-Roof,..\Base-BP3\A-BP3-Admin-Plan-Col-Grid,..\Base-BP3\H-BP3-Admin-Plan-Roof

File = H:\44238-004\Drawings\Bid Package 3 - WTP Rehab\Plumbing\44238-004BP3-P06 Saved by HsCal2 Save date = 6/9/2014 8:01 PM

PLOT DATE: 6/10/2014 3:25 PM BY: HSCAL1

SANITARY DRAINAGE CALCULATIONS			
ITEM	**QUANTITY**	**DFU**	**TOTAL DFU**
FIRST FLOOR			
WC	4	4	16
UR	1	2	2
LAV	6	1	6
EWC	2	0.5	1
MSB	1	2	2
FD	3	2	6
SH	2	2	4
S	0	2	0
FIRST FLOOR TOTAL			37
SECOND FLOOR			
WC	2	4	8
UR	0	2	0
LAV	2	1	2
EWC	2	0.5	1
MSB	0	2	0
FD	5	2	10
ESE	1	20	20
S	3	2	6
SECOND FLOOR TOTAL			47
TOTAL BUILDING			84

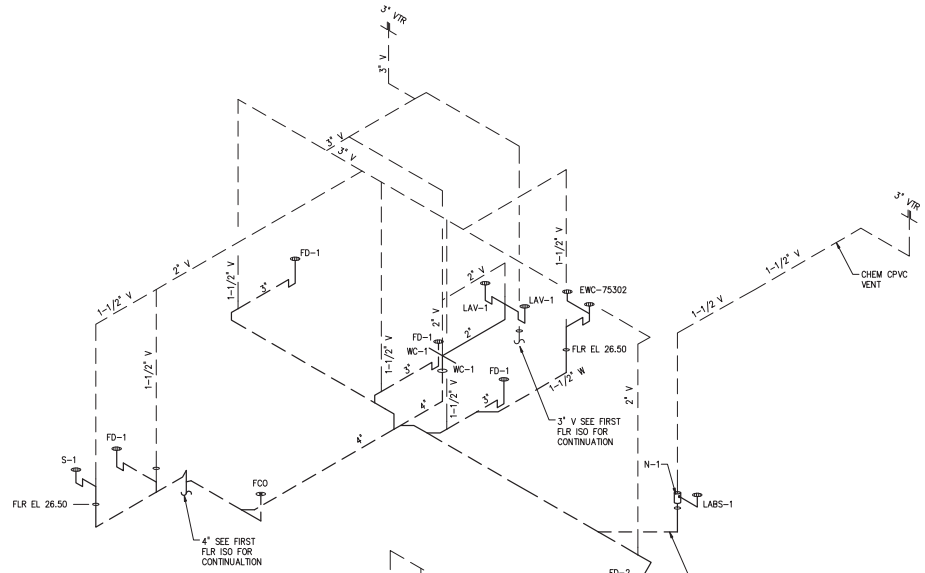

SECOND FLOOR SANITARY ISOMETRIC

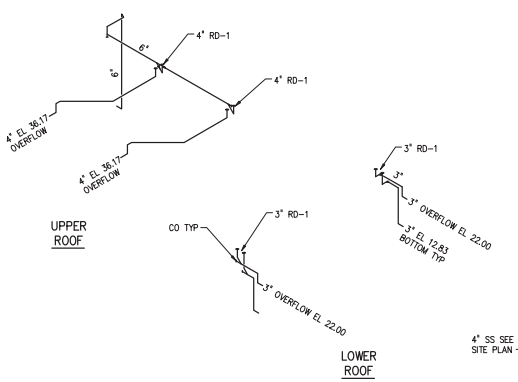

STORM DRAIN ISOMETRIC

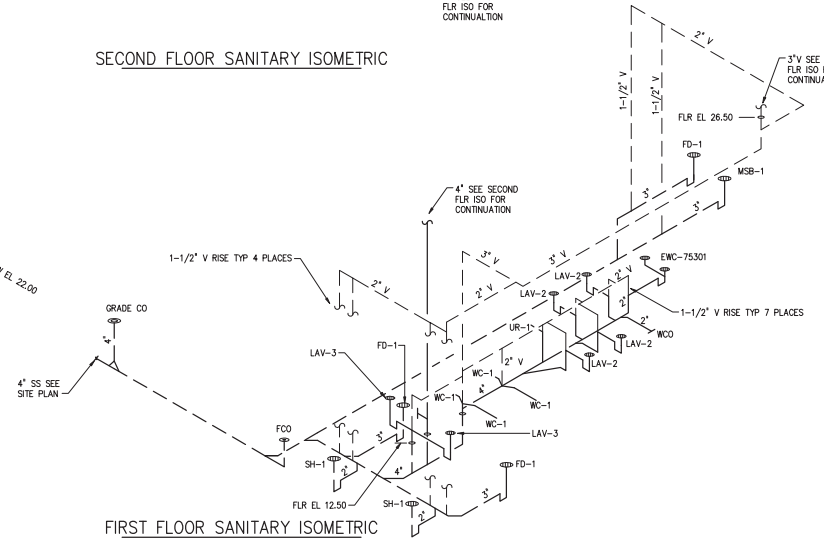

FIRST FLOOR SANITARY ISOMETRIC

PIPE MATERIALS ARE SPECIFIED IN SECTIONS 15000, PIPING-GENERAL AND 15410, PLUMBING-PIPING AND PIPE INSULATION SYSTEMS

NO.	DATE	ISSUED FOR	BY

DESIGNED B.L.S.
DRAWN C.M.S.
CHECKED B.L.S.
PROJ. ENGR. G.A.B.

BERNARD L. STEIGER P.E.
No. 49808

HAZEN AND SAWYER
Environmental Engineers & Scientists
4000 Hollywood Boulevard, Suite 750N
Hollywood, Florida 33021
Certificate of Authorization Number: 2771

SCALE –

CLIENTS PROJECT: –
ENGINEERS PROJECT: 44238-004
CAD REFERENCE: 44238-004BP3-P07

NORTH MIAMI FLORIDA
CITY OF NORTH MIAMI
PUBLIC WORKS UTILITIES

WINSON WATER TREATMENT PLANT
BID PACKAGE 3: WTP REHABILITATION
NEW ADMINISTRATION BUILDING
SANITARY ISOMETRIC

DATE: JUNE 2014
SHEET: 324 OF 335
DRAWING: P-07

PERMITTING

PLOT DATE: 6/10/2014 3:25 PM BY: HSCALI1
XREFs= ..\Tblock\44238-004-BP3-TB
File = H:\44238-004\Drawings\Bid Package 3 - WTP Rehab\Plumbing\44238-004BP3-P07 Saved by bsteiger Save date = 6/9/2014 8:53 PM

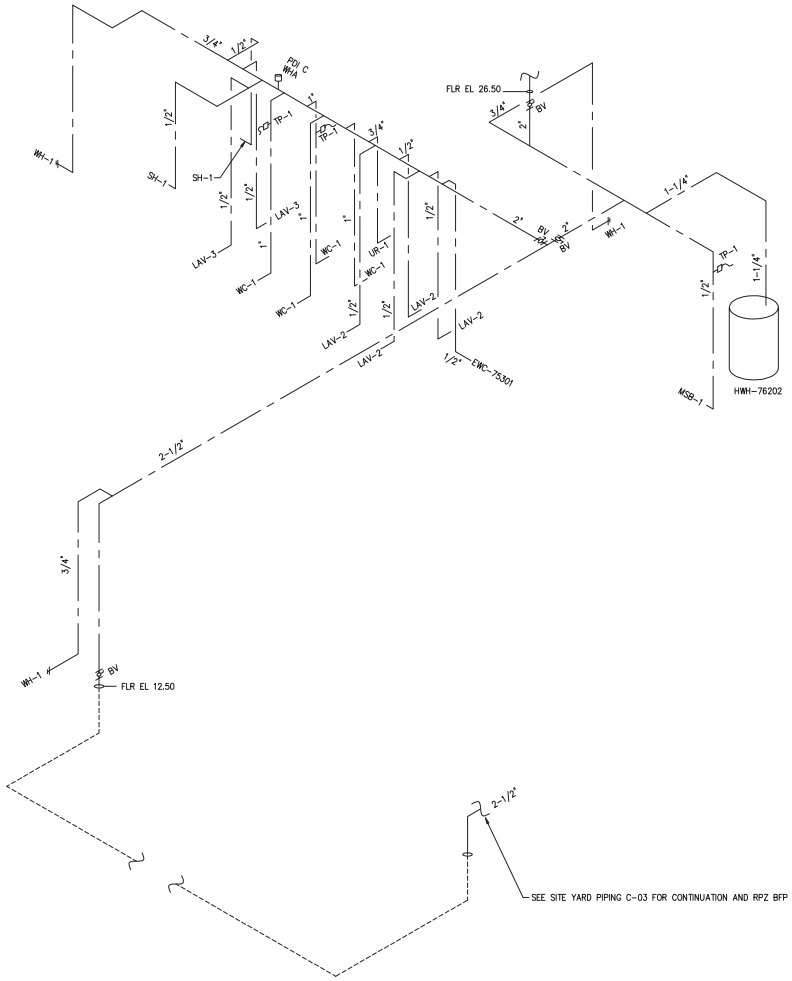

FIRST FLOOR CW ISOMETRIC

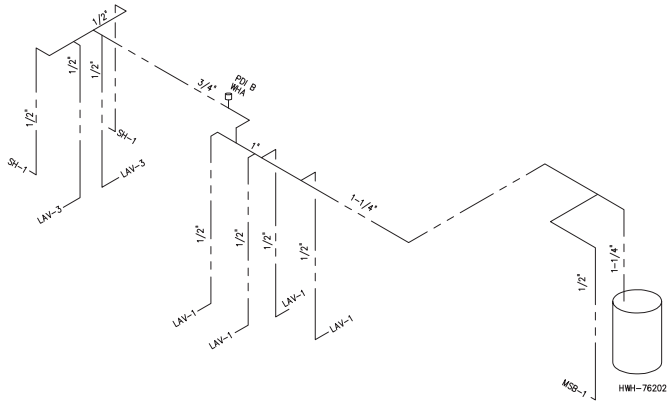

FIRST FLOOR HW ISOMETRIC

WATER CALCULATIONS			
ITEM	**QUANTITY**	**WSFU**	**TOTAL WSFU**
FIRST FLOOR			
WC	4	10	40
UR	1	5	5
LAV	6	2	12
EWC	2	0.25	0.5
MSB	1	3	3
FD	2	0	0
SH	2	4	8
S	0	4	0
FIRST FLOOR TOTAL			68.5
SECOND FLOOR			
WC	2	10	20
UR	0	5	0
LAV	2	2	4
EWC	2	0.25	0.5
MSB	0	3	0
FD	5	0	0
ESE	1	20	20
S	2	4	8
SECOND FLOOR TOTAL			52.5
TOTAL BUILDING			121

PIPE MATERIALS ARE SPECIFIED IN SECTIONS 15000, PIPING–GENERAL AND 15410, PLUMBING–PIPING AND PIPE INSULATION SYSTEMS

PLOT DATE: 6/10/2014 3:36 PM BY: HSCAUI

NO.	DATE	ISSUED FOR	BY

XREFs= ..\Tblock\44238-004-BP3-TB

DESIGNED B.L.S.
DRAWN C.M.S.
CHECKED B.L.S.
PROJ. ENGR. G.A.B.

BERNARD L. STEIGER P.E.
No. 49808

HAZEN AND SAWYER
Environmental Engineers & Scientists
4000 Hollywood Boulevard, Suite 750N
Hollywood, Florida 33021
Certificate of Authorization Number: 2771

SCALE –

CLIENTS PROJECT: –
ENGINEERS PROJECT: 44238-004
CAD REFERENCE: 44238-004BP3-P08

NORTH MIAMI FLORIDA
CITY OF NORTH MIAMI
PUBLIC WORKS UTILITIES

WINSON WATER TREATMENT PLANT
BID PACKAGE 3: WTP REHABILITATION
NEW ADMINISTRATION BUILDING FIRST FLOOR POTABLE WATER ISOMETRIC

DATE: JUNE 2014
SHEET: 325 OF 335
DRAWING: P-08

PERMITTING

File = H:\44238-004\Drawings\Bid Package 3 - WTP Rehab\Plumbing\44238-004BP3-P08 Saved by bsteiger Save date = 6/9/2014 6:05 PM

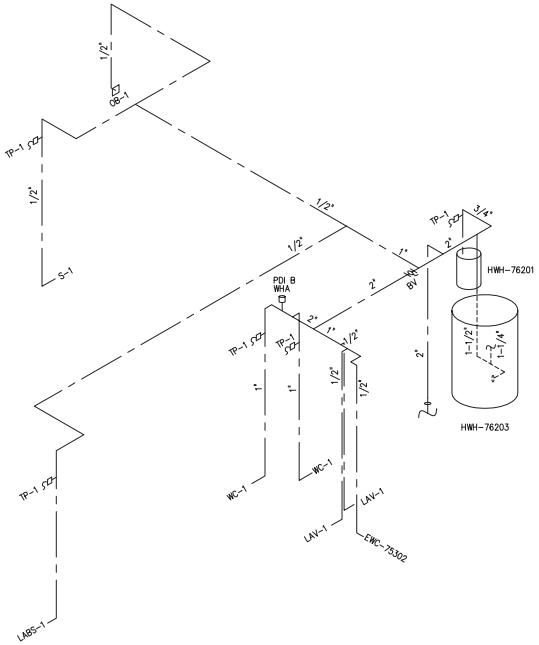

SECOND FLOOR CW ISOMETRIC

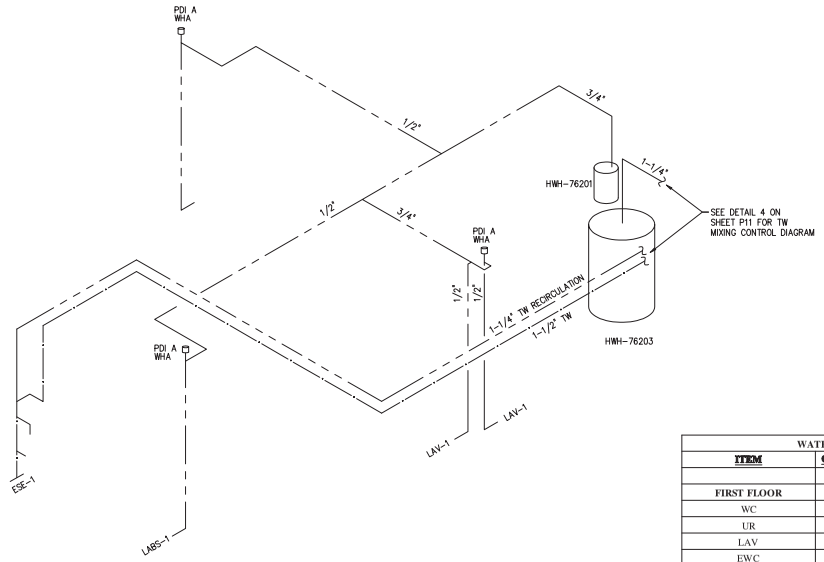

SECOND FLOOR HW ISOMETRIC

WATER CALCULATIONS			
ITEM	**QUANTITY**	**WSFU**	**TOTAL WSFU**
FIRST FLOOR			
WC	4	10	40
UR	1	5	5
LAV	4	2	8
EWC	2	0.25	0.5
MSB	1	3	3
FD	2	0	0
SH	2	4	8
S	0	4	0
FIRST FLOOR TOTAL			64.5
SECOND FLOOR			
WC	2	10	20
UR	0	5	0
LAV	2	2	4
EWC	2	0.25	0.5
MSB	0	3	0
FD	5	0	0
ESE	1	20	20
S	2	4	8
SECOND FLOOR TOTAL			52.5
TOTAL BUILDING			117

PIPE MATERIALS ARE SPECIFIED IN SECTIONS 15000, PIPING-GENERAL AND 15410, PLUMBING-PIPING AND PIPE INSULATION SYSTEMS

PLOT DATE: 6/10/2014 3:26 PM BY: HSCALI1

NO.	DATE	ISSUED FOR	BY

XREFs= ..\Tblock\44238-004-BP3-TB

DESIGNED B.L.S.
DRAWN C.M.S.
CHECKED B.L.S.
PROJ. ENGR. G.A.B.

BERNARD L. STEIGER P.E.
No. 49808

HAZEN AND SAWYER
Environmental Engineers & Scientists
4000 Hollywood Boulevard, Suite 750N
Hollywood, Florida 33021
Certificate of Authorization Number: 2771

SCALE –

CLIENTS PROJECT: –
ENGINEERS PROJECT: 44238-004
CAD REFERENCE: 44238-004BP3-P09

NORTH MIAMI FLORIDA
CITY OF NORTH MIAMI
PUBLIC WORKS UTILITIES

WINSON WATER TREATMENT PLANT
BID PACKAGE 3: WTP REHABILITATION
NEW ADMINISTRATION BUILDING
SECOND FLOOR POTABLE WATER
ISOMETRIC

DATE: JUNE 2014
SHEET: 326 OF 335
DRAWING: P-09

PERMITTING

File = H:\44238-004\Drawings\Bid Package 3 - WTP Rehab\Plumbing\44238-004BP3-P09 Saved by bsteiger Save date = 6/9/2014 9:18 PM

PLUMBING FIXTURE ROUGH-IN SCHEDULE

FIXTURE TAG	FIXTURE TYPE	CW (PIPE SIZE)	HW (PIPE SIZE)	WASTE (PIPE SIZE)	VENT (PIPE SIZE)	MANUFACTURER	MODEL	GALLONS PER FLUSH/MIN	FAUCET/FLUSH VALVE MANUFACTURER	FAUCET/VALVE MODEL	REMARKS
WC-1	FLUSH VALVE WATER CLOSET	1"	–	4"	2"	AMERICAN STANDARD	3351.660	1.6/1.0	SLOAN	8111-1.6/1.1	1, 2, 3
UR-1	FLUSH VALVE URINAL	3/4"	–	2"	1 1/2"	AMERICAN STANDARD	6590.125	0.125	SLOAN	8186 HEU	3
LAV-1	WALL HUNG LAV	1/2"	1/2"	1 1/2"	1 1/2"	AMERICAN STANDARD	0124.131	0.5	AMERICAN STANDARD	6055.205	4, 5, 6, 19, 20
LAV-2	COUNTER TOP LAV	1/2"	1/2"	1 1/2"	1 1/2"	AMERICAN STANDARD	0405.004EC	0.5	AMERICAN STANDARD	6055.205	4, 5, 6, 19
MSB-1	FLOOR MOUNTED MOP SINK	1/2"	1/2"	3"	1 1/2"	MUSTEE	63M	1.5	CHICAGO	897-CP	7
SH-1	SHOWER HEAD AND MIXING VALVE	1/2"	1/2"	2"	1 1/2"	SYMMONS	96-500-B30-L-V	1.5	SYMMONS	4-295	8
S-1	SINGLE COMPARTMENT SINK	1/2"	1/2"	1 1/2"	1 1/2"	JUST	SL-1921-A-GR	0.5	MOEN	8701	9
N-1	LAB DRAIN TANK NEUTRALIZATION	–	–	1 1/2"	1 1/2"	ORION	STYLE 10	–	–	–	–
FD-1	FLOOR DRAIN ADJUSTABLE TOP	–	–	3" OR 4"	2"	ZURN	Z415BZ-AA-Y-P	–	–	–	10, 12
FD-2	CHEM RESISTANT FLOOR DRAIN	–	–	4"	2"	ZURN	Z550-AR-VP-Y	–	–	–	11, 12
TP-1	TRAP PRIMER	1/2"	–	–	–	ZURN	Z1022	–	–	–	–
WH-1	WALL HYDRANT	3/4"	–	–	–	ZURN	Z1321	–	–	–	NON-FREEZE
RD-1	ROOF DRAIN	–	–	4"	–	JOSAM	22504	–	–	–	18
EWC-75301 & 2	DUAL HEIGHT WATER COOLER	1/2"	–	1 1/2"	1 1/2"	ELKAY	EZOSTL8C	0.2	–	–	13
LABS-1	LAB SINK SERVICE CONNECTIONS	1/2"	1/2"	1 1/2"	1 1/2"	–	–	–	–	–	14
ESE-1	EMERGENCY SHOWER/EYEWASH	1 1/4"	–	–	–	HAWS	8317	20	–	–	16
ESP-75100	ELEVATOR SUMP PUMP	–	–	1-1/2	–	BARNES	SERIES SP50	58	–	–	17
OB-1	OUTLET BOX	1/2	–	–	–	OATEY	39145	0.2	–	–	–
FCO	FLOOR CLEAN OUT	–	–	–	–	ZURN	Z1400BZZNARBP	–	–	–	–
WCO	WALL CLEAN OUT	–	–	–	–	ZURN	Z1441ZBP	–	–	–	–
LAV-3	ADA WALL HUNG	1/2"	1/2"	1-1/2"	1-1/2"	AMERICAN STANDARD	9140.047	0.5	AMERICAN STANDARD	6055.165	4, 5 ,19, 20

REMARKS
1. FURNISH COMPLETE WITH OPEN FRONT SEAT. INSTALL W/CARRIER AT ADA MANDATED HEIGHT FROM FLOOR TO SEAT FOR ALL TYPES DESIGNATED AS "ACCESSIBLE" ON ARCHITECTURAL PLANS.
2. DUAL FLUSH OPERATION (1.6 GALLONS PER FLUSH HIGH FLOW/ 1.1 GALLONS PER FLUSH LOW FLOW)-LEED RELATED.
3. DC POWERED FLUSH VALVE WITH MANUAL OVER-RIDE, LONG-LIFE BATTERY OPERATED WITH PROXIMITY SENSOR AUTO FLUSH.
4. ADA PROTECTIVE INSULATION COVERS (TRUEBRO LAVGUARD) ON SUPPLIES AND WASTE FOR ALL LAVS DESIGNATED AS "ACCESSIBLE" ON ARCHITECTURAL PLANS.
5. REVISE TO MODEL 6057.205 MODEL WHEN MULTIPLE LAVS CONNECTED IN SERIES. PROVIDE ASSE 1016 RATED UNDER COUNTER MIXING VALVE (AMERICAN STANDARD 605XTMV).
6. 4" CENTERSET FAUCET WITH TOUCHLESS AUTO PROXIMITY SENSOR.
7. SPOUT TO INCLUDE INTEGRAL VACUUM BREAKER. PROVIDE HOSE AND HOSE HOLDER, MOP HANGER, BUMPER GUARDS AND DURAGUARD WALL GUARDS.
8. SUBSTITUTE STANDARD T-300-V HAND SHOWER WAND WITH MODEL EF-100 AND PROVIDE 1.5 GPM FLOW RESTRICTOR.
9. SINGLE HOLE PUNCHED.
10. NICKEL BRONZE ROUND TOP WITH SEDIMENT BUCKET AND VANDAL RESISTANT SCREWS.
11. ACID RESISTING ENAMEL COATING ON INTERIOR DRAIN BODY, SEDIMENT BUCKET AND GRATED TOP.
12. PROVIDE 1/2" TRAP PRIMER CONNECTION FOR ALL RESTROOMS, MECHANICAL ROOMS AND LAB ROOMS. FURNISHED BY LAB CASEWORK EQUIPMENT VENDOR.
13. DUAL STATION ADA COMPLIANT BARRIER FREE WATER COOLER, HFC-134A REFRIGERANT, 9.7 GPH OF 50 DEG WATER AT 70 DEG AMBIENT ROOM TEMPERATURE.
14. FURNISHED BY LAB CABINET VENDOR.
15. NOT USED.
16. CHROME PLATED BRASS IN-LINE 50 X 50 MESH WATER STRAINER.
17. CODE REQUIREMENT ASME 17.1 WITH OIL ALARM SYSTEM. PUMP RATED FOR 58 GPM AT 10 HEAD FEET, 1/2 HP, 120V, 1PH, 3450 RPM MOTOR. PROVIDE SEE WATER, OIL SMART MODEL #OSS-100 CONTROLLER. SEE SPECIFICATION 11208.
18. SEE ARCHITECTURAL DRAWINGS FOR LOCATION OF ROOF DRAINS.
19. PROFLOW 17 GUAGE CHROME P-TRAP W/CO AND 17 GAUGE CHROME GRID DRAIN.
20. FURNISH COMPLETE WITH CARRIER.

PLUMBING WATER HEATER SCHEDULE

MARK	MANUFACTURER	MODEL	TYPE	CW (PIPE SIZE)	HW (PIPE SIZE)	INPUT (KW OR CFH GAS)	THERMAL EFFICIENCY	FLUE (PIPE SIZE)	RECOVERY RATE @ 85 DEG RISE (GPH)	STORAGE (GALLONS)	ELECTRICAL VOLTS/PHASE/HZ	REMARKS
HWH-76201	AO SMITH	DEL20	ELEC	3/4"	3/4"	2.5 KW	100%	–	12	20	208/1/60	1, 2, 3, 4, 5, 7
HWH-76202	AO SMITH	DEN66	ELEC	3/4"	3/4"	6.0 KW	100%	–	28	66	208/1/60	1, 2, 3, 4, 5, 7
HWH-76203	HUBBELL	EMV-120	ELEC	1 1/2"	1 1/2"	6.0 KW	100%	–	24	120	208/1/60	1, 2, 4, 5, 6

REMARKS
1. ALL WATER HEATERS SHALL MEET OR EXCEED STANDBY LOSS REQUIREMENTS PER US DEPARTMENT OF ENERGY AND ASHRAE 90.1-2007.
2. RATED FOR 150 PSIG WORKING PRESSURE.
3. PROVIDE EXTRUDED HIGH DENSITY ANODE ROD.
4. PROVIDE ASME RATED TEMPERATURE AND PRESSURE RELEIF VALVE SIZED FOR HEATER COPPER DRAIN LINE PIPED TO WITHIN 6" OF FLOOR.
5. INSTALL DIELECTRIC UNIONS AND SHUT-OFF ISOLATION VALVES AT EACH WATER CONNECTION.
6. OSHA 29 CFR 1910.151 AND ANSI Z358.1.
7. PROVIDE CAMCO DIELECTRIC HEAT TRAP ON COLD AND HOT WATER CONNECTIONS.

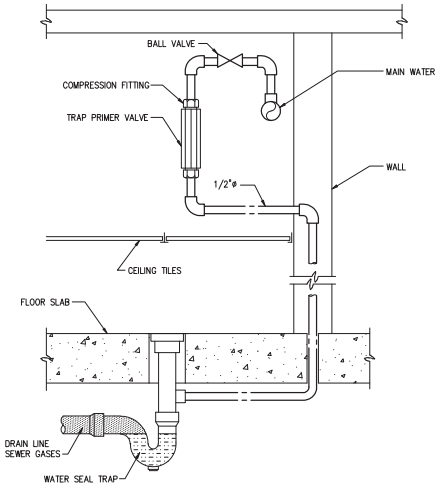

TRAP PRIMER
DETAIL 1
N.T.S. –

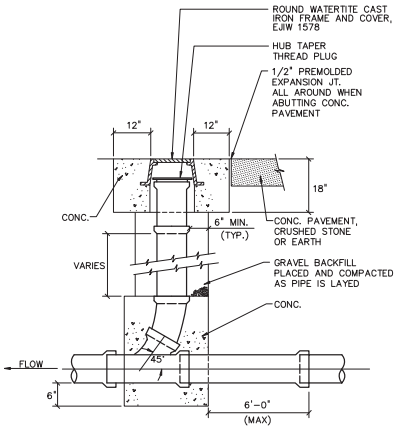

GRADE CLEAN OUT
DETAIL 3
N.T.S. –

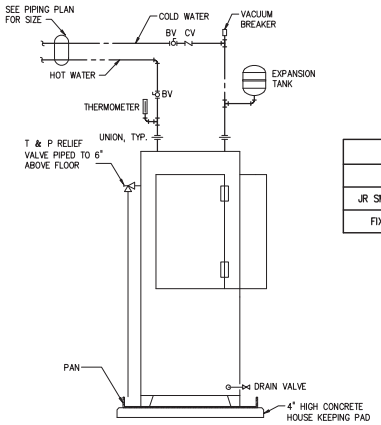

ELECTRIC WATER HEATER
DETAIL 2
N.T.S. –

WATER HAMMER ARRESTERS (WHA) SCHEDULE

PDI SYMBOLS	A	B	C	D	E	F
JR SMITH HYDROTROL WHA	5005	5010	5020	5030	5040	5050
FIXTURE UNIT RATING	1-11	12-32	33-60	61-113	114-154	155-330

PIPE MATERIALS ARE SPECIFIED IN SECTIONS 15000, PIPING-GENERAL AND 15410, PLUMBING-PIPING AND PIPE INSULATION SYSTEMS

NO.	DATE	ISSUED FOR	BY

DESIGNED B.L.S.
DRAWN C.M.S.
CHECKED B.L.S.
PROJ. ENGR. G.A.B.

BERNARD L. STEIGER P.E.
No. 49808

HAZEN AND SAWYER
Environmental Engineers & Scientists
4000 Hollywood Boulevard, Suite 750N
Hollywood, Florida 33021
Certificate of Authorization Number: 2771

SCALE –

CLIENTS PROJECT: –
ENGINEERS PROJECT: 44238-004
CAD REFERENCE: 44238-004BP3-P10

NORTH MIAMI FLORIDA
CITY OF NORTH MIAMI
PUBLIC WORKS UTILITIES

WINSON WATER TREATMENT PLANT
BID PACKAGE 3: WTP REHABILITATION
PLUMBING DETAILS
SHEET 1

DATE: JUNE 2014
SHEET: 327 OF 335
DRAWING: P-10

PERMITTING

PLOT DATE: 6/10/2014 3:36 PM BY: HSCALII
XREFs= ..\block\44238-004-BP3-TB
File = H:\44238-004\Drawings\Bid Package 3 - WTP Rehab\Plumbing\44238-004BP3-P10 Saved by bsteiger Save date = 6/9/2014 8:01 PM

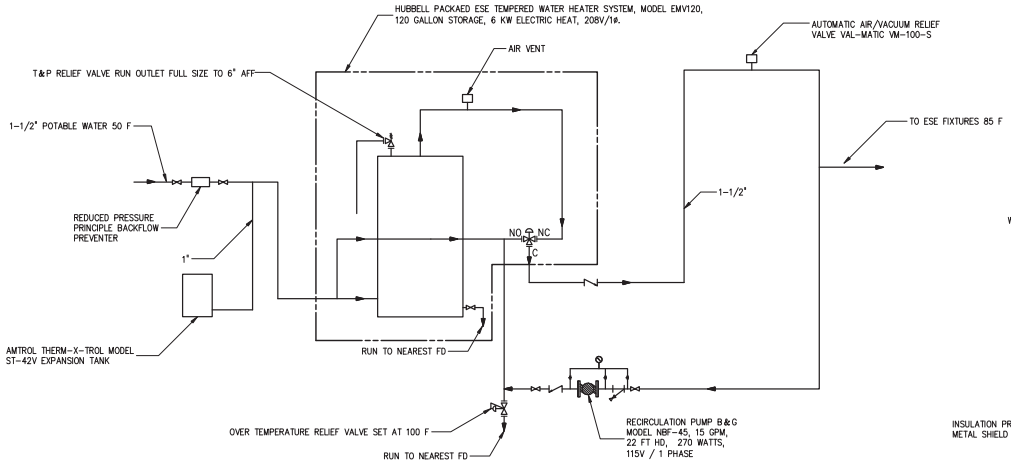

ESE TEMPERED WATER SYSTEM

DETAIL 4

NO SCALE –

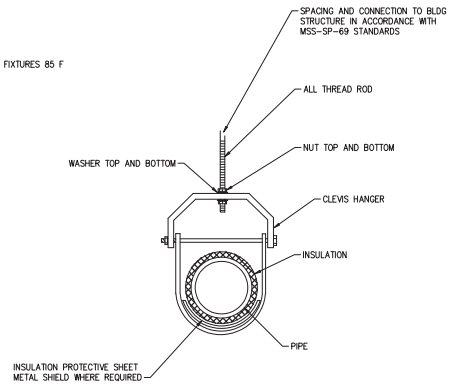

PIPE HANGER SUPPORT

DETAIL 5

NO SCALE –

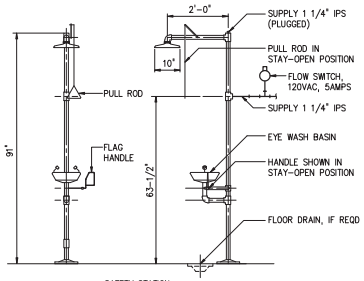

ESE NOTES:

1. PROVIDE HAWS 8317 (INTERIOR) ESE WITH SCALD PROTECTION BLEED VALVE.
2. TEMPERED WATER HEATING AND MIXING CONTROL SYSTEM – REFERENCE DETAIL 4.
3. EA-HAWS MODEL 9001 EMERGENCY ALARM AND LIGHT SYSTEM SHALL INCLUDE AN AMBER FLASHING LIGHT, AND 90 DB BUZZER AT 10 FEET THAT IS OPERATED BY A 1-1/4" NPT DOUBLE POLE, DOUBLE THROW FLOW SWITCH WHICH CONTAINS MULTIPLE SETS OF CONTACTS FOR REMOTE ACTIVATION AND PIPE BRACKET. SWITCH SHALL ACTIVATE AT 1.5 GPM. VOLTAGE: 120 VAC, 60 CYCLES, NEMA 4.
4. PROVIDE SHOWER TEST KIT AND UNIVERSAL SIGN.

EMERGENCY SHOWER AND EYEWASH (ESE)

DETAIL 6

NO SCALE –

PIPE MATERIALS ARE SPECIFIED IN SECTIONS 15000, PIPING-GENERAL AND 15410, PLUMBING-PIPING AND PIPE INSULATION SYSTEMS

PLOT DATE: 6/10/2014 3:36 PM BY: HSCALII

NO.	DATE	ISSUED FOR	BY

XREFs= ..\Tblock\44238-004-BP3-TB

DESIGNED B.L.S.
DRAWN C.M.S.
CHECKED B.L.S.
PROJ. ENGR. G.A.B.

BERNARD L. STEIGER P.E.
No. 49808

HAZEN AND SAWYER
Environmental Engineers & Scientists
4000 Hollywood Boulevard, Suite 750N
Hollywood, Florida 33021
Certificate of Authorization Number: 2771

SCALE –

CLIENTS PROJECT: –
ENGINEERS PROJECT: 44238-004
CAD REFERENCE: 44238-004BP3-P11

NORTH MIAMI FLORIDA
CITY OF NORTH MIAMI
PUBLIC WORKS UTILITIES

WINSON WATER TREATMENT PLANT
BID PACKAGE 3: WTP REHABILITATION
LANDSCAPE
ELEVATIONS – CODE
MINIMUM

DATE: JUNE 2014
SHEET: 328 OF 335
DRAWING: P-11

PERMITTING

File = H:\44238-004\Drawings\Bid Package 3 - WTP Rehab\Plumbing\44238-004BP3-P11 Saved by Bernard Save date = 6/9/2014 6:27 PM

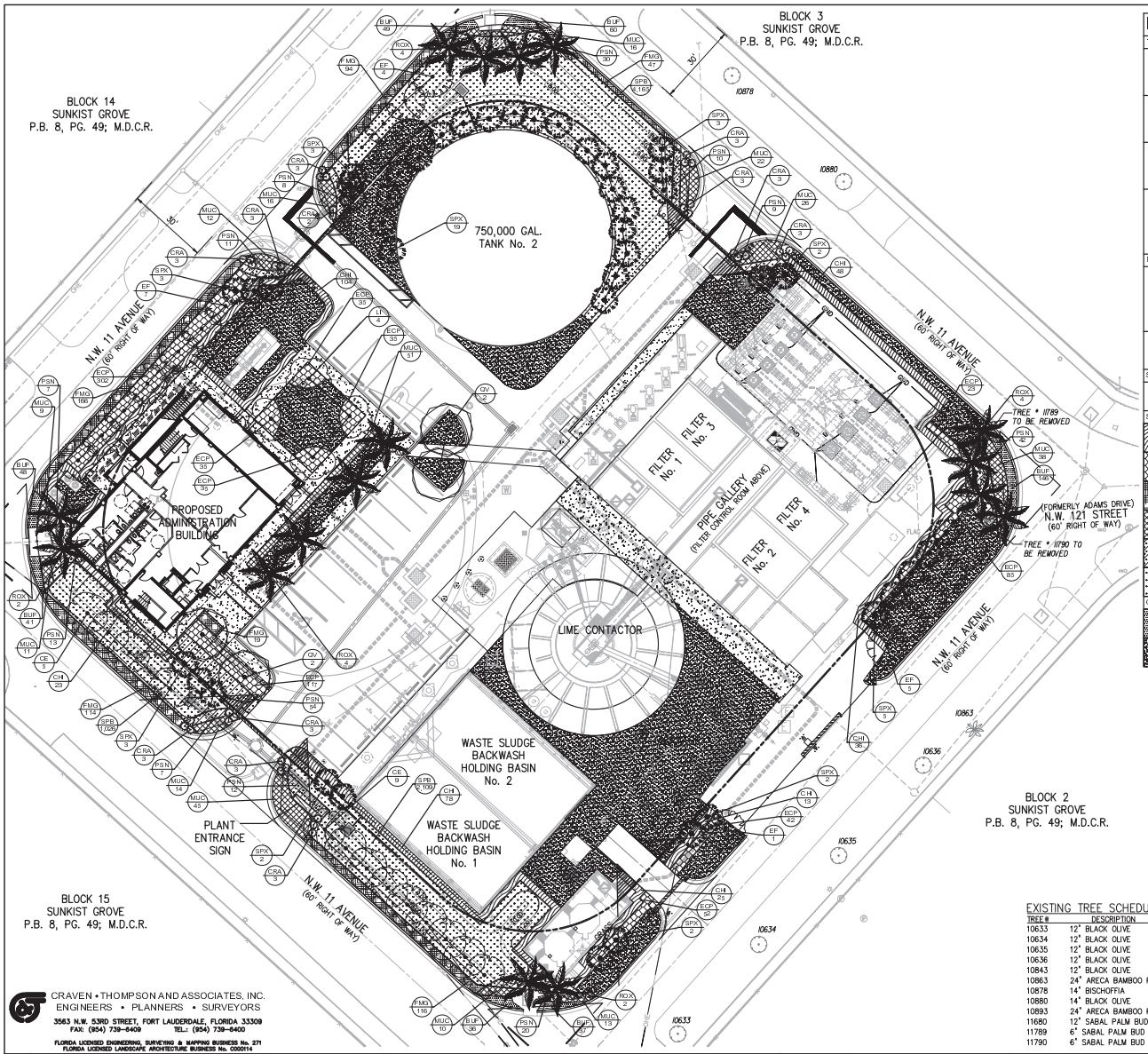

PLANT SCHEDULE

TREES	CODE	QTY	BOTANICAL NAME	COMMON NAME	SPECIFICATIONS	CANOPY	NATIVE
	CE	14	Conocarpus erectus	Green Button Wood	2.5" cal. 12' ht. x 6' spread, multi trunk	30' diam.	NATIVE
	EF	17	Eugenia foetida	Spanish Stopper	2.5" cal. 12' ht. x 6' spread, multi trunk	20' diam.	NATIVE
	LI	4	Lagerstroemia indica	Crape Myrtle	2.5" cal. 12' ht. x 6' spread, multi trunk	20' diam.	
	QV	4	Quercus virginiana 'Highrise'	Highrise Live Oak	3" Cal. 14' Ht. x 6' Spread	50' diam.	NATIVE
PALM TREES	**CODE**	**QTY**	**BOTANICAL NAME**	**COMMON NAME**	**SPECIFICATIONS**		
	ROX	16	Roystonea regia	Florida Royal Palm	18' DBH. 12' CT. MATCHED	25' diam.	NATIVE
	SPX	44	Sabal palmetto	Sabal Palm	12' DBH. 12-15' OA HT-STAGGERED	10' diam.	NATIVE
SHRUBS	**CODE**	**QTY**	**BOTANICAL NAME**	**COMMON NAME**	**SPECIFICATIONS**		
	CRA	35	Crinum americanum	Seven Sisters	7 gal		
SHRUB AREAS	**CODE**	**QTY**	**BOTANICAL NAME**	**COMMON NAME**	**SPECIFICATIONS**	**SPACING**	
	CHI	327	Chrysobalanus icaco 'Red tip'	Red Tip Cocoplum	24X24X24"	30" o.c.	NATIVE
	ECP	761	Echinacea purpurea	Purple Coneflower	12X12X12"	18" o.c.	NATIVE
	FMG	556	Ficus microcarpa 'Green Island'	Green Island Ficus	12X12X12"	18" o.c.	
	MUC	283	Muhlenbergia capillaris	Pink Muhly	18X18X18"	24" o.c.	NATIVE
	PSN	223	Psychotria nervosa	Wild Coffee	24X24X24"	30" o.c.	NATIVE
	SPB	7,300	Sparrina bakeri	Sand Cord Grass	1 gal	12" o.c.	NATIVE
GROUND COVERS	**CODE**	**QTY**	**BOTANICAL NAME**	**COMMON NAME**	**SPECIFICATIONS**	**SPACING**	
	BUF	417	Bulbine frutescens	Bulbine	1 gal	12" o.c.	
	SOD	10,850 sf	Stenotaphrum secundatum	St. Augustine Grass	sod		

GENERAL NOTES:

1. THIS DRAWING IS BASED UPON AND BOUNDARY AND TOPOGRAPHIC SURVEY PREPARED BY CRAVEN THOMPSON AND ASSOCIATES, INC. (CTA) DATED 03-10-10. CTA PROJECT No. 10-0013-001
2. THE PROPOSED LANDSCAPE PLAN UTILIZES "FLORIDA FRIENDLY LANDSCAPE" PRINCIPLES.
3. ALL PLANT MATERIAL SPECIFIED FROM THE FLORIDA FRIENDLY PLANT SELECTION GUIDE.
4. ALL PLANT MATERIAL TO CONFORM TO THE STANDARDS FOR FLORIDA NO. 1 OR BETTER AS GIVEN IN THE "GRADES AND STANDARDS FOR NURSERY PLANTS".

NORTH MIAMI - WINSTON WTP **ENHANCED CODE MINIMUM LANDSCAPE TABLE**

LANDSCAPE LEGEND

Zoning District: PU - Public Use Net Lot Area: 1.348 AC or 58,715 sf

OPEN SPACE	REQUIRED	PROVIDED
A. Square feet of open space required by Chapter 33: Net Lot Area=58,715 sf X 20%=11,743 sf	11,743 sf	23,278 sf
B. Square feet of parking lot landscape required by Div. 12, N. Miami 14,600 sf X 15% = 2,190 SF	2,190 sf	2,355 sf
C. Total square feet of landscaped area(11,743 sf + 2,190 sf = 13,933sf)	13,933 sf	25,633 sf
LAWN AREA CALCULATION		
A. Total square feet of landscaped open space = 13,933 sf		
B. Maximum lawn area (St. Augustine sod) permitted (20% X 13,933 sf)	2,786 sf	10,850 sf
TREES		
A. The number of trees required per net lot acre	22	
less the existing numer of trees that meet minimum requirements (minus)	0	
22 trees X net lot acreage of 1.348ac = 30 trees	**30**	**38**
B. 30% palm trees allowed (3 palms = 1 tree)	27 palms	53 palms
(30 trees X 30%= 9 trees or 27 palms)	(9 trees)	(18 trees)
C. Percentage of native trees required (# of trees provided X 30%)	17	73
(56 trees provided X 30% =17 trees)		
D. Street trees (max. average spacing 25' oc)	**26**	**17**
(901 lf along street /35 = 26)		
Palms as street trees (max average spacing 25' oc)	36	**16**
(901 lf along street / 25 = 36)		
E. Street trees located directly beneath power lines (max avg spacing 25' oc)	0	0
(0 lf along street / 25= 0)		
F. Total number of trees provided	**56**	**69**
SHRUBS		
A. The total number of trees required (56) X 10 = 560 shrubs required	560	9,668
B. The number of shubs required (560) X 30% = 168 Native Shrubs Req'd	168	9,077

IRRIGATION PLAN:
Required by Chapter 33. Auto Irrigation __X__ or hose bib ____ provided.

EXISTING TREE SCHEDULE

TREE #	DESCRIPTION	LOCATION	DISPOSITION
10633	12" BLACK OLIVE	OFF-SITE	PROTECT IN PLACE
10634	12" BLACK OLIVE	OFF-SITE	PROTECT IN PLACE
10635	12" BLACK OLIVE	OFF-SITE	PROTECT IN PLACE
10636	12" BLACK OLIVE	OFF-SITE	PROTECT IN PLACE
10843	12" BLACK OLIVE	OFF-SITE	PROTECT IN PLACE
10863	24" ARECA BAMBOO PALM BUD HEIGHT=4'	OFF-SITE	PROTECT IN PLACE
10878	14" BISCHOFFIA	OFF-SITE	PROTECT IN PLACE
10880	14" BLACK OLIVE	OFF-SITE	PROTECT IN PLACE
10893	24" ARECA BAMBOO PALM BUD HEIGHT=4'	OFF-SITE	PROTECT IN PLACE
11680	12" SABAL PALM BUD HEIGHT 20'	ON-SITE	PROTECT IN PLACE
11789	6" SABAL PALM BUD HEIGHT 20'	ON-SITE	REMOVE
11790	6" SABAL PALM BUD HEIGHT 20'	ON-SITE	REMOVE

CRAVEN • THOMPSON AND ASSOCIATES, INC.
ENGINEERS • PLANNERS • SURVEYORS
3563 N.W. 53RD STREET, FORT LAUDERDALE, FLORIDA 33309
FAX: (954) 739-6409 TEL.: (954) 739-6400
FLORIDA LICENSED ENGINEERING, SURVEYING & MAPPING BUSINESS No. 271
FLORIDA LICENSED LANDSCAPE ARCHITECTURE BUSINESS No. C000214

NO.	DATE	ISSUED FOR	BY

DESIGNED DJS
DRAWN DJS
CHECKED JDH
PROJ. ENGR. DJS

Douglas J. Schultz LA
No. LA6666937

HAZEN AND SAWYER
Environmental Engineers & Scientists
4000 Hollywood Boulevard, Suite 750N
Hollywood, Florida 33021
Certificate of Authorization Number: 2771

SCALE 1"=20'-0"

CLIENTS PROJECT: –
ENGINEERS PROJECT: 44238-004
CAD REFERENCE: 44238-0048P3-L1

NORTH MIAMI FLORIDA
CITY OF NORTH MIAMI
PUBLIC WORKS UTILITIES

WINSON WATER TREATMENT PLANT
BID PACKAGE 3: WTP REHABILITATION
LANDSCAPE PLAN

DATE: JUNE 2014
SHEET: 329 OF 335
DRAWING: L-1

PERMITTING

GENERAL NOTES

1. A PRE-CONSTRUCTION MEETING WITH THE CITY OF NORTH MIAMI LANDSCAPE INSPECTOR IS REQUIRED PRIOR TO LANDSCAPING ACTIVITIES INCLUDING REMOVAL OF TREES AND/OR INSTALLATION OF PLANT MATERIAL. CALL THE LANDSCAPE INSPECTOR A MINIMUM OF 5 DAYS PRIOR TO DESIRED START DATE TO SCHEDULE PRE-CONSTRUCTION MEETING.
2. ALL EXISTING TREES PROPOSED TO REMAIN ARE TO BE SEPARATED FROM THE LIMITS OF DISTURBANCE OF THE CONSTRUCTION AREA BY TREE PROTECTION FENCING AND SIGNAGE. THE TREE PROTECTION FENCING SHALL BE LOCATED AT THE EDGE OF THE TREE PROTECTION ZONE AS DEPICTED ON THE PLAN OR AT THE EDGE OF THE DRIPLINE(S) IF A TREE PROTECTION ZONE IS NOT DESIGNATED. NO MATERIAL STORAGE OR CONSTRUCTION ACCESS IS PERMITTED WITHIN THE TREE PROTECTION ZONE.
3. ALL EXISTING TREES SHALL BE PRUNED TO ANSI A-300 STANDARDS TO CORRECT POTENTIAL HAZARDS.
4. A TREE REMOVAL PERMIT IS REQUIRED PRIOR TO REMOVAL OR RELOCATION OF ANY TREE OR PALM. CONTACT THE CITY OF NORTH MIAMI ARBORIST TO OBTAIN PERMIT INFORMATION.
5. LANDSCAPE CONTRACTOR SHALL NOTIFY SUNSHINE ONE CALL OF FLORIDA, INC. AT 1-800-432-4770 A MINIMUM OF 2 FULL BUSINESS DAYS PRIOR TO DIGGING. LANDSCAPE CONTRACTOR IS RESPONSIBLE FOR AVOIDING DAMAGE TO UTILITIES FROM PLANT INSTALLATION.
6. TREE RELOCATIONS:
   A. EXISTING TREES TO BE RELOCATED SHALL BE ROOT PRUNED A MINIMUM OF 120 DAYS PRIOR TO RELOCATION.
   B. MINIMUM ROOT BALL SIZES SHALL BE IN ACCORDANCE WITH ANSI STANDARDS AS FOLLOWS:

CALIPER	MINIMUM ROOT BALL DIAMETER
1	16
2	24
3	32
4	42
5	54
6	60
7	70
8	80
>8	12 INCHES PER INCH OF TRUNK DIAMETER

   TRANSPLANTED TREES WITH UNDERSIZED ROOT BALLS MAY BE REJECTED BY THE CITY ARBORIST AND REPLACEMENT TREES MAY BE REQUIRED.
   C. A TEMPORARY IRRIGATION SYSTEM SHALL BE PROVIDED DURING AND FOR THE FIRST 40 DAYS AFTER ROOT PRUNING.
7. ALL PLANTING MUST FOLLOW PLANTING SPECIFICATIONS AND DETAILS SHOWN ON THE PLAN.
8. SUBSTITUTIONS OF PLANT SPECIES OR SPECIFICATIONS MUST BE APPROVED IN WRITING BY THE CITY OF NORTH MIAMI ARBORIST PRIOR TO USE.
9. ALL PLANT MATERIAL PLANTED PER THIS LANDSCAPE PLAN SHALL BE FLORIDA GRADE #1 OR BETTER, AS SPECIFIED IN THE CURRENT EDITION OF THE FLORIDA DEPARTMENT OF AGRICULTURE'S GRADES AND STANDARDS FOR NURSERY PLANTS. DAMAGED PLANT MATERIAL SHALL BE REJECTED AND REPLACED PRIOR TO INSTALLATION.
10. ALL SIZES SHOWN FOR PLANT MATERIAL ARE TO BE CONSIDERED MINIMUMS.
11. WHERE QUANTITIES AND OR SPECIES DIFFER BETWEEN THE PLANTING PLANS AND PLANT LISTS, THE PLANS SHALL TAKE PRECEDENCE.
12. ALL NEW PLANT MATERIAL SHALL BE WARRANTED BY THE LANDSCAPE CONTRACTOR FOR A MINIMUM PERIOD OF ONE YEAR. THE WARRANTEE PERIOD SHALL BEGIN AFTER ACCEPTANCE OF THE PLANTS BY THE CITY ARBORIST.
13. PLANT BEDS TO BE TREATED WITH PRE-EMERGENT HERBICIDE PRIOR TO PLANTING.
14. ALL TREE AND PALM STAKING AND SUPPORT SHALL BE REMOVED ONE YEAR AFTER INSTALLATION.
15. NO FERTILIZER SHALL BE APPLIED TO NEWLY PLANTED TREES AND PALMS.
16. ALL LANDSCAPE MATERIAL SHALL BE THOROUGHLY WATERED AT THE TIME OF PLANTING. NO DRY PLANTING PERMITTED.
17. LANDSCAPE CONTRACTOR SHALL BE RESPONSIBLE FOR PROVIDING TEMPORARY WATER PROVISIONS UNTIL SUCH TIME AS THE IRRIGATION SYSTEM IS OPERATIONAL.
18. ALL WIRE GUYS AND OR FABRIC STRAPS SHALL BE FLAGGED WITH FLORESCENT COLORED TAPE.
19. MULCHING
   A. ALL LANDSCAPE AREAS NOT COVERED BY SOD SHALL BE COVERED BY A MINIMUM 3-INCH LAYER OF MULCH.
   B. A MULCH RING WITH A MINIMUM RADIUS OF 24 INCHES (48 INCH DIAMETER), IS REQUIRED AROUND ALL NEWLY INSTALLED TREES AND PALMS.
   C. MULCH SHALL BE MALEUCA "FLORIMULCH" MULCH
   D. NO MULCH SHALL BE PLACED TOUCHING OR WITHIN SIX INCHES OF THE TRUNK OF A TREE OR PALM.
20. ALL NEWLY LANDSCAPED AREAS SHALL BE EXCAVATED DOWN TO A DEPTH OF 30 INCHES BELOW FINAL GRADE AND BACK FILLED WITH CLEAN DEBRIS-FREE SOIL. EXISTING SOIL MAY BE re-USED FOR BACKFILLING IF DEBRIS IS REMOVED AND ORGANIC CONTENT IS SUFFICIENT OR SOIL IS AUGMENTED WITH TOPSOIL. CONSTRUCTION ACCESS SHALL BE RESTRICTED FROM THE LANDSCAPE AREA AFTER EXCAVATION AND BACKFILL IS COMPLETE.
21. ALL LANDSCAPE AREAS SHALL BE FINISH GRADED SUCH THAT THEY ARE A MINIMUM OF 3.5 INCHES BELOW SURROUNDING PAVED SURFACES SO AS NOT TO IMPEDE THE FLOW OF DRAINAGE INTO LANDSCAPED AREAS AND TO ALLOW FOR A 3-INCH MULCH LAYER.
22. THE LOCATION OF PLANT MATERIAL AS SHOWN ON THESE PLANS IS FINAL. THE FINAL LOCATIONS CAN BE ADJUSTED ON SITE TO ACCOMMODATE UNFORESEEN FIELD CONDITIONS. THESE CHANGES MUST COMPLY WITH ALL SAFETY SETBACK CRITERIA AND BE DIRECTED OR APPROVED BY THE LANDSCAPE ARCHITECT AND THE CITY OF SUNRISE CODES.
23. REPORT ANY AND ALL DISCREPANCIES BETWEEN THE CONSTRUCTION DRAWINGS AND FIELD CONDITIONS TO THE LANDSCAPE ARCHITECT IMMEDIATELY.
24. THE CONTRACTOR IS RESPONSIBLE FOR VERIFYING ALL PLANT COUNTS AND REPORT ANY DISCREPANCIES TO THE LANDSCAPE ARCHITECT PRIOR TO CONSTRUCTION.
25. BEFORE CONSTRUCTION BEGINS THE CONTRACTOR IS RESPONSIBLE FOR LOCATING ALL UNDERGROUND UTILITIES AND SHALL AVOID DAMAGE TO ALL UTILITIES DURING CONSTRUCTION. IF SUCH DAMAGE OCCURS THE CONTRACTOR IS RESPONSIBLE FOR ANY NECESSARY REPAIRS AND THEY SHOULD BE MADE IMMEDIATELY AT THE CONTRACTORS EXPENSE WITH SUPERVISION OF THE LANDSCAPE ARCHITECT.
26. ALL WORK MUST COMPLY WITH THE FLORIDA STATE STATUTE 553.81 - "PROTECTION OF UNDERGROUND PIPELINES."
27. THE CONTRACTOR MUST COMPLY WITH ALL STATE AND LOCAL WATER QUALITY STANDARDS.
28. THE LOCATION OF ALL THE UTILITIES SHOWN ON THE PLAN IS APPROXIMATE. THE EXACT LOCATION SHALL BE DETERMINED BY THE CONTRACTOR ON SITE. ALL PLANTING MAY BE ADJUSTED TO AVOID CONFLICTS WITH UTILITIES AND OR EXISTING ABOVE GROUND ELEMENTS. ANY ADJUSTMENTS GREATER THAN 10 FEET SHALL BE DONE ONLY WITH THE APPROVAL OF THE LANDSCAPE ARCHITECT.
29. CAUTION SHOULD BE EXERCISED WHEN WORKING NEAR EXISTING PLANTING AND ANY FURNISHING THAT IS TO REMAIN ON SITE TO PREVENT ANY DAMAGE. ANY SIGNS, STRUCTURES, OR PLANTING SHALL BE REPLACED AT THE CONTRACTORS EXPENSE IF DAMAGED BEYOND USE. DAMAGED BEYOND USE WILL BE DETERMENED BY THE LANDSCAPE ARCHITECT.
30. ANY PUBLIC LAND CORNER WITHIN THE LIMITS OF CONSTRUCTION IS TO BE PROTECTED. IF A CORNER MONUMENT IS IN DANGER OF BEING DESTROYED AND HAS NOT BEEN PROPERLY REFERENCED, THE CONTRACTOR SHALL NOTIFY THE DISTRICT LOCATION SURVEYOR IMMEDIATELY.
31. MAINTENANCE OF TRAFFIC FOR THIS PROJECT SHALL BE IN ACCORDANCE WITH THE MANUAL OF UNIFORM TRAFFIC CONTROL DEVICES FOR STREETS AND HIGHWAYS (U.S. DEPARTMENT OF TRANSPORTATION, F.H.W.A.). ATTENTION IS DIRECTED TO STANDARD INDEX NUMBER 623 OF THE ROADWAY AND TRAFFIC DESIGN STANDARDS.
32. THE CONTRACTOR SHALL INSURE THAT INSTALLATION OF ALL PLANTING IN MEDIANS AND RIGHT OF WAYS CONFORMS TO CRITERIA SET FORTH IN F.D.O.T. ROADWAY AND TRAFFIC DESIGN STANDARDS AND IN F.D.O.T. MAINTENANCE RATING PROGRAM.
33. ANY MAINTENANCE THAT INVOLVES TRAFFIC ACTIVITY SHALL BE COORDINATED WITH THE CONTRACTOR AND ONGOING CONSTRUCTION ACTIVITIES.
34. CONTRACTOR IS RESPONSIBLE FOR CLEANING ALL WORK AREAS AT THE END OF EACH WORKING DAY. ANY DEBRIS SHALL BE COLLECTED AND DEPOSITED APPROPRIATELY OFF SITE DAILY. ALL MATERIALS, PRODUCTS, AND EQUIPMENT SHALL BE STORED IN AN ORGANIZED FASHION AS DIRECTED BY THE LANDSCAPE ARCHITECT.
35. THE CONTRACTOR IS RESPONSIBLE FOR OBTAINING ALL PERMITS THAT ARE REQUIRED BY THE CITY FOR TREE REMOVAL, RELOCATION, TREE PROTECTION OR INSTALLATION BEFORE BEGINNING WORK.
36. ALL EXISTING TREES TO REMAIN SHALL BE PROTECTED BY INSTALLING PROTECTIVE BARRIERS AROUND THE DRIP LINE OF TREES. THESE PROTECTIVE BARRIERS SHALL BE SEEN EASILY BY OPERATORS OF TRUCKS AND OTHER EQUIPMENT. THEY SHALL BE CONSTRUCTED OF STURDY MATERIALS (NOT FLAGGING OR RIBBON) AND SHALL BE INSTALLED PRIOR TO AND DURING CONSTRUCTION.
37. DO NOT STORE OR USE ANY MATERIALS OR EQUIPMENT WITHIN THE DRIP LINE OF ANY TREE THAT IS TO BE RELOCATED OR PROTECTED IN PLACE UNLESS THE ACTIVITY IS BEING DONE TO PROTECT THE TREES.
38. DO NOT DISCHARGE OR CONTAMINATE THE SOIL WITHIN THE DRIP LINE OF ANY OF THE TREES TO BE RELOCATED OR PROTECTED IN PLACE. THIS INCLUDES SUBSTANCES SUCH AS PAINT, OIL, SOLVENTS, PETROLEUM PRODUCTS, ASPHALT, CONCRETE, MORTAR, OR ANY OTHER MATERIAL THAT MAY CAUSE DAMAGE TO THE TREES ROOT SYSTEM.
39. CLEARING OF VEGETATION WITHIN THE DRIP LINE OF THE TREES DESIGNATED TO BE PROTECTED IN PLACE OR RELOCATED SHALL BE PERFORMED CAUTIOUSLY WITH HAND TOOLS TO MINIMIZE ANY DAMAGE TO THE TREE'S ROOT SYSTEM.
40. DO NOT ATTACH ANYTHING TO TREES THAT ARE TO REMAIN ON THE SITE UNLESS IT IS SOMETHING THAT WILL PROTECT AND NOT DAMAGE THE TREE.
41. KEEP A NATURAL GRADE ABOVE THE DRIP LINE ON ANY TREE THAT IS TO BE PROTECTED IN PLACE. ANY PRESERVED TREES DISTURBED DURING CONSTRUCTION MUST BE RETURNED TO ITS ORIGINAL GRADE AFTER CONSTRUCTION.
42. ALL LANDSCAPE AND LIGHTING WILL BE IN ACCORDANCE WITH ORDINANCE #2011-029 FOR PROTECTION OF SEA TURTLES.
43. ALL LANDSCAPE AND PLANTING SHALL COMPLY WITH BROWARD COUNTY LAND USE POLICY 9.03.03 AND WITH CHAPTER 62B-55 OF THE FLORIDA ADMINISTRATIVE CODE.

LANDSCAPE NOTES

1. ALL PLANT MATERIAL FURNISHED BY THE LANDSCAPE CONTRACTOR UNLESS OTHERWISE SPECIFIED SHALL BE FLORIDA NO. 1 GRADE OR BETTER, AND SHALL BE INSTALLED AS SPECIFIED IN "GRADES AND STANDARDS FOR NURSERY PLANTS," PUBLISHED BY THE FLORIDA DEPARTMENT OF AGRICULTURE AND CONSUMER SERVICES. ALL PLANT MATERIAL MUST BE HEALTHY, VIGOROUS MATERIALS, FREE OF PESTS AND DISEASES.
2. ALL SIZES SHOWN FOR PLANT MATERIAL ON THE PLAN ARE TO BE CONSIDERED AS MINIMUMS. ALL PLANT MATERIAL MUST MEET OR EXCEED THESE MINIMUM REQUIREMENTS FOR BOTH HEIGHT AND SPREAD. ANY OTHER REQUIREMENTS FOR SPECIFIC SHAPE OR EFFECT AS NOTED ON THE PLAN OR SPECIFICATIONS WILL ALSO BE REQUIRED FOR ACCEPTANCE. ANY SUBSTITUTIONS MUST BE APPROVED BY LANDSCAPE ARCHITECT BEFORE PLANTING.
3. THE CONTRACTOR IS RESPONSIBLE FOR ALL PLANTING MEETING SPECIFICATIONS AS NOTED BEFORE INSTALLATION. CONTRACTOR SHALL IMMEDIATELY REMOVE ALL PLANTING THAT DOES NOT MEET SPECIFICATIONS AND BE HELD RESPONSIBLE TO REPLACE IT WITH APPROPRIATE PLANTING.
4. IN THE EVENT OF A VARIATION BETWEEN THE PLANT LISTS AND THE ACTUAL QUANTITY OF PLANTS SHOWN, THE PLANS HOLD TRUE.
5. ALL ROOT BALLS SHALL CONFORM TO THE SIZE STANDARDS SET FORTH
6. CONTRACTOR TO SUBMIT TO THE LANDSCAPE ARCHITECT THE GROWERS AND/OR SITE INSPECTION CERTIFICATE FOR PLANT MATERIALS TWO (2) WEEKS PRIOR TO COMMENCEMENT OF WORK.
7. ALL PLANT MATERIALS MUST BE PROTECTED DURING TRANSPORT AND DELIVERY TO THE JOB SITE WITH SHADE CLOTH OR OTHER ACCEPTABLE MEANS OF WINDBURN PREVENTION.
8. CONTRACTORS SHALL FIELD VERIFY ALL INFORMATION PRIOR TO INITIATING PLANTING INSTALLATION. ALL EXISTING PLANTING SHALL REMAIN INTACT AND UNDISTURBED UNLESS OTHERWISE NOTED ON THE PLANS.
9. LANDSCAPE CONTRACTOR SHALL FIELD STAKE THE LOCATION OF ALL PLANT MATERIAL PRIOR TO INSTALLATION FOR THE REVIEW AND APPROVAL OF THE LANDSCAPE ARCHITECT.
10. ALL TREES MUST BE FLORIDA #1, STRAIGHT TRUNKED, FULL HEADED, AND MEET ALL REQUIREMENTS SPECIFIED.
11. CONTRACTOR TO GUARANTEE PLANT MATERIAL FOR A FULL YEAR ESTABLISHMENT PERIOD FOLLOWING DATE OF SUBSTANTIAL COMPLETION.
12. CONTRACTOR TO REPLACE REJECTED PLANT MATERIAL WITHIN ONE WEEK OF NOTICE.
13. CONTRACTOR TO REQUEST INSPECTION OF PROJECT IN WRITING. IF ALL WORK IS SATISFACTORY AND COMPLETE IN ACCORDANCE WITH CONDITIONS OF CONTRACT DOCUMENTS, THEN THE CITY AND LANDSCAPE ARCHITECT SHALL DECLARE SUBSTANTIALLY COMPLETE. SUBSTANTIAL COMPLETION CONSTITUTES THE BEGINNING OF THE GUARANTEE PERIOD.
14. INSTALLATION- ALL PLANT MATERIAL SHALL BE INSTALLED IN A SOUND WORKMANLIKE MANNER AND ACCORDING TO GOOD PLANTING PROCEDURES WITH THE QUALITY OF PLANT MATERIALS AS HEREINAFTER DESCRIBED. ALL ELEMENTS OF LANDSCAPING SHALL BE INSTALLED SO AS TO MEET ALL APPLICABLE ORDINANCES AND CODE REQUIREMENTS.
15. CONTRACTOR IS RESPONSIBLE FOR WATERING AND MAINTAINING ALL TREES AND LANDSCAPE UNTIL FINAL ACCEPTANCE BY OWNER. CONTRACTOR SHALL INSURE THAT ALL DRAINAGE AND PERCOLATION OF ALL PLANTING PITS PRIOR TO INSTALLATION OF PLANT MATERIAL. CONTRACTOR IS RESPONSIBLE FOR REPLACEMENT OF PLANTS IF DEAD OR DYING PRIOR TO FINAL ACCEPTANCE.
16. TYPICALLY, SHRUB AND GROUNDCOVER PLANTINGS ARE SHOWN AS MASS PLANTING BEDS. PLANTS SHOULD BE PLACED ON A TRIANGULAR SPACING SHOWN IN THE PLANTING DETAILS. PLANT CENTER TO CENTER DIMENSIONS (O.C.) ARE LISTED ON THE PLANT LIST.
17. TREES GROWN IN GROW BAGS OR GROW BAG TYPE MATERIAL MUST HAVE THE GROW BAG REMOVED ENTIRELY BEFORE PLANTING.
18. BALLED AND BURLAPPED MATERIAL SHALL HAVE THE TOP ONE HALF (1/2) OF THE BURLAP AROUND THE BASE OF THE TRUNK CUT AND PULLED BACK. DO NOT REMOVE THE BURLAP BUT WIRE CAGES, STRAPS, ETC. MUST BE CUT AND REMOVED COMPLETELY BEFORE INSTALLATION.
19. CONTRACTOR SHALL REFER TO THE LANDSCAPE PLANTING DETAILS, PLANT LIST, GENERAL NOTES, AND ANY OTHER MATERIALS FROM THE LANDSCAPE ARCHITECT FOR COMPLETE LANDSCAPE PLANTING INSTRUCTIONS.
20. "BRANCH TOUCHING BRANCH" PROVIDED AT TIME OF INSTALLATION. ALL HEDGES - BOTH COCOPLUM AND SILVER BUTTONWOOD TO BE MIN. 24" AT PLANTING AND 36" HIGH WITHIN ONE YEAR.
21. THE FOLLOWING GUIDELINES SHALL BE FOLLOWED TO ENSURE SUCCESSFUL TRANSPLANTING OF TREES:
   a. ANY TREE BEING RELOCATED SHALL NOT BE UNNECESSARILY DAMAGED DURING REMOVAL, TRANSPORT, OR REPLANTING OF THAT TREE.
   b. TREES MUST BE ROOT PRUNED APPROPRIATELY PRIOR TO REMOVAL.
   c. DURING AND FOLLOWING TRANSPLANTING THE ROOT BALL MUST BE KEPT MOIST AT ALL TIMES.
   d. TRANSPLANTED TREES SHALL BE BRACED AT LEAST ONE FULL YEAR.
   e. TRANSPLANTED TREES SHALL NOT BE FERTILIZED AT PLANTING TIME BUT SHALL BE WATERED SUFFICIENTLY UNTIL THE TREE GROWTH IS REESTABLISHED.
   f. RELOCATED TREES/PALMS WILL BE MOVED IN ACCORDANCE WITH MINIMUM STANDARDS SET FORTH IN ANSI A-300
   g. ALL CROWN PRUNING SHALL BE DONE IN ACCORDANCE WITH NATIONAL ARBORIST ASSOCIATION STANDARDS OR PALM PRUNING IN ACCORDANCE WITH CITY STANDARDS.
23. LANDSCAPE CONTRACTOR SHALL REGRADE ALL AREAS DISTURBED BY PLANT REMOVAL, RELOCATION, AND/OR INSTALLATION WORK. LANDSCAPE CONTRACTOR SHALL REPLACE (BY EQUAL SIZE AND QUALITY) ANY AND ALL EXISTING PLANT MATERIAL DISTURBED OR DAMAGED BY PLANT REMOVAL, RELOCATION OR INSTALLATION.
24. CONTRACTOR SHALL BE RESPONSIBLE TO REPLACE ALL PORTIONS OF EXISTING LAWN AREAS DAMAGED WHILE COMPLETING PLANTING INSTALLATION WITH SAME GRASS SPECIES TO THE SATISFACTION OF THE LANDSCAPE ARCHITECT.
25. GENERAL GRADING TO APPROXIMATELY 1 INCH SHALL BE PROVIDED BY THE CONTRACTOR. ALL FINISHED SITE GRADING AND FINAL DECORATIVE BERM SHAPING SHALL BE PROVIDED BY THE LANDSCAPE CONTRACTOR.
26. ALL LANDSCAPE MATERIALS SHALL BE MAINTAINED TO PROVIDE CONTINUOUS CLEAR ZONES FOR SIGHT VISIBILITY FOR PEDESTRIANS AND VEHICULAR TRAFFIC AND LANDSCAPE MAINTENANCE SHALL CONFORM TO STANDARD INDEX 546 CRITERIA SET FORTH IN F.D.O.T. ROADWAY AND TRAFFIC DESIGN STANDARDS.

SOILS, FERTILIZER AND MULCH

1. ENSURE THAT ALL PLANTING SOIL IS FERTILE, FRIABLE, NATURAL LOAM SURFACE SOIL, REASONABLY FREE OF SUBSOIL, CLAY LUMPS, WEEDS AND OTHER LITTER, AND FREE OF ROOTS, STUMPS AND STONES LARGER THAN ONE INCH IN ANY DIMENSION, AND OTHER EXTRANEOUS OR TOXIC MATTER HARMFUL TO PLANT GROWTH. SHOULD ANY SOIL AMENDMENT BE NECESSARY, THE CONTRACTOR SHALL BRING THIS TO THE ATTENTION OF THE LANDSCAPE ARCHITECT.
2. APPLY APPROVED HERBICIDE ACCORDING TO MANUFACTURERS RATE AND SPECS WITHIN LIMITS OF ALL AREAS TO BE PLANTED. PROTECT EXISTING PLANTS TO REMAIN FROM OVERSPRAY OR SPRAY WITHIN ROOT ZONE. CONTRACTOR TO ENSURE TOTAL WEED ERADICATION.
3. SCARIFY SUBSOIL TO A DEPTH OF 3 INCHES.
4. PLANTING MIX FOR TREES, SHRUBS, AND GROUNDCOVERS SHALL CONSIST OF A THOROUGHLY BLENDED MIXTURE OF:
   A. 20% TOPSOIL
   B. 10% PEAT OR COMPOST
   C. 70% SAND
5. PLANTING MIX FOR BACKFILL AROUND ROOT BALLS OF PALMS:
   A. 90% NATIVE SAND FROM ON SITE OR APPROVED SUBSTITUTE
   B. 10% TOPSOIL
6. TOPSOIL
   A. 50 PERCENT DECOMPOSED ORGANIC MATTER (MUCK)
   B. 25 PERCENT PEAT
   C. 25 PERCENT EXISTING SOIL (IF SOIL IS SUITABLE FOR PLANTING)
7. FERTILIZE ALL TREES, SHRUBS AND GROUNDCOVER WITH PLANTING TABLETS 20-20-5 FORMULA, 21 GRAM.
8. ALL SHRUB BEDS SHALL BE EXCAVATED TO A MINIMUM DEPTH OF 30" AND BACK FILLED WITH THE SPECIFIED MIXTURE.
9. SMOOTH ALL PREPARED TOPSOIL TO 3" EXCEPT WITHIN DRIP LINES OF EXISTING TREES AND 4" BELOW TOP OF SURROUNDING PAVING EDGES. REMOVE ALL ROCKS AND OTHER OBJECTS OVER 1" IN DIAMETER.
10. FINISH GRADE ALL PREPARED TOPSOIL AREAS TO A SMOOTH, EVEN SURFACE ASSURING POSITIVE DRAINAGE AWAY FROM THE STRUCTURES AND ELIMINATE ANY LOW AREAS WHICH MAY COLLECT WATER.
11. TOPSOIL SHALL NOT BE EXTREMELY ACIDIC OR ALKALINE, NOR CONTAIN ANY TOXIC SUBSTANCE WHICH MAY BE HARMFUL TO PLANT GROWTH. THE PH SHALL BE IN THE RANGE OF 5.5-6.5.
12. CONTRACTOR SHALL MULCH ALL PLANTING MATERIAL THROUGHOUT AND COMPLETELY TO A 3 INCH DEPTH WITH CLEAN, WEED FREE MALEUCA FLORIMULCH MULCH.
13. MINIMUM OF 2" TOPSOIL MUST BE ADDED UNDER ALL SODDED AREAS.

IRRIGATION NOTES:

1. XERISCAPE PRINCIPLES HAVE BEEN APPLIED TO THIS LANDSCAPE PLAN AS SPECIFIED IN SFWMD'S XERISCAPE PLANT GUIDE II AND SHALL BE APPLIED ALL THROUGHOUT LANDSCAPE INSTALLATION AND MAINTENANCE.
2. THE CONTRACTOR SHALL MAINTAIN TEMPORARY IRRIGATION OR PROVIDE HAND WATERING FOR ALL RELOCATED TREES AND PALMS FROM NOTICE TO PROCEED UNTIL PERMANENT IRRIGATION SYSTEM IS OPERABLE.
3. THE IRRIGATION SYSTEM SHALL BE CONFIGURED TO ACCOMMODATE EXISTING TREES AND PALMS.
4. ALL LANDSCAPED AREAS MUST BE IRRIGATED IN ACCORDANCE WITH ALL LOCAL/COUNTY REQUIREMENTS.
5. REMOVE EXISTING IRRIGATION EQUIPMENT WHICH INTERFERES WITH ANY CONSTRUCTION. THIS INCLUDES, BUT IS NOT LIMITED TO, CONTROLLERS, SPRINKLER HEADS, PIPE, QUICK COUPLERS, BACKFLOW PREVENTERS, CONTROL WIRE AND CONDUITS. ADDITIONALLY THE CONTRACTOR IS RESPONSIBLE FOR MAINTAINING THE EXISTING SYSTEM THROUGHOUT THE CONSTRUCTION PROCESS.
6. LANDSCAPE CONTRACTOR SHALL COORDINATE ALL PLANTING WORK WITH IRRIGATION WORK. INSPECT IRRIGATION SYSTEM AND INSURE THAT ADEQUATE WATER IS AVAILABLE BEFORE BEGINNING PLANTING OPERATIONS. IRRIGATION SYSTEMS WILL NOT PROVIDE SUFFICIENT QUANTITIES OF WATER FOR NEWLY PLANTED MATERIALS. THE LANDSCAPE CONTRACTOR IS RESPONSIBLE FOR DEEP ROOT HAND WATERING.
7. SEE IRRIGATION PLANS FOR ADDITIONAL NOTES AND DETAILS.

CRAVEN • THOMPSON AND ASSOCIATES, INC.
ENGINEERS • PLANNERS • SURVEYORS
3563 N.W. 53RD STREET, FORT LAUDERDALE, FLORIDA 33309
FAX: (954) 739-6409 TEL.: (954) 739-6400
FLORIDA LICENSED ENGINEERING, SURVEYING & MAPPING BUSINESS No. 271
FLORIDA LICENSED LANDSCAPE ARCHITECTURE BUSINESS No. C000214

NO.	DATE	ISSUED FOR	BY

DESIGNED DJS
DRAWN DJS
CHECKED JDH
PROJ. ENGR. DJS

Douglas J. Schultz LA
No. LA6666937

HAZEN AND SAWYER
Environmental Engineers & Scientists
4000 Hollywood Boulevard, Suite 750N
Hollywood, Florida 33021
Certificate of Authorization Number: 2771

SCALE: NONE

CLIENTS PROJECT: –
ENGINEERS PROJECT: 44238-004
CAD REFERENCE: 44238-004BP3-L2

NORTH MIAMI FLORIDA
CITY OF NORTH MIAMI
PUBLIC WORKS UTILITIES

WINSON WATER TREATMENT PLANT
BID PACKAGE 3: WTP REHABILITATION
LANDSCAPE NOTES

DATE: JUNE 2014
SHEET: 330 OF 335
DRAWING: L-2

PERMITTING

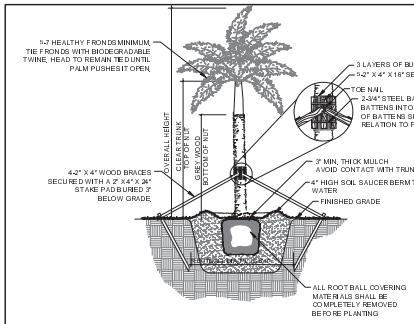

1 ROYAL PALM

SECTION NTS

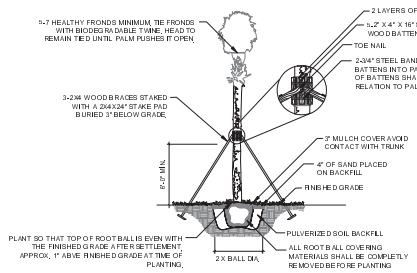

2 PALM

SECTION NTS

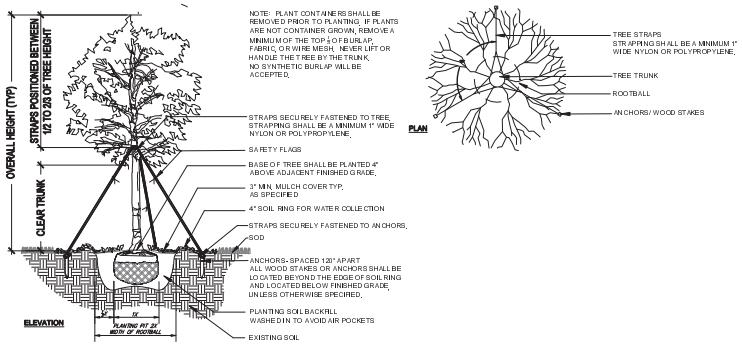

3 LARGE TREE

SECTION NTS

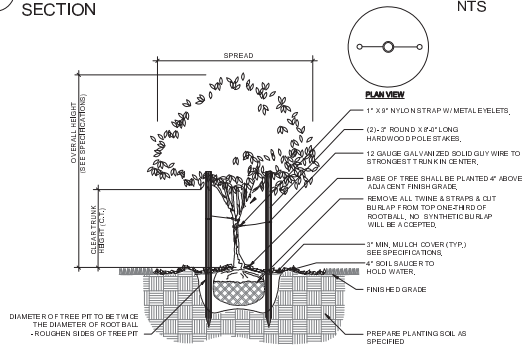

4 SMALL TREE

SECTION NTS

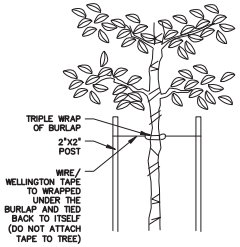

5 TREE STRAPPING FOR YOUNG TREES

SECTION NTS

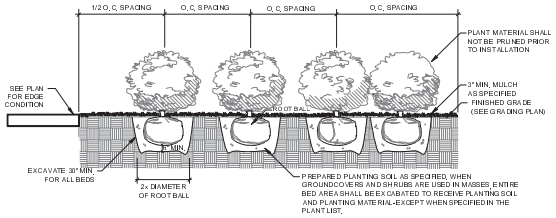

6 SHRUB PLANTING

SECTION NTS

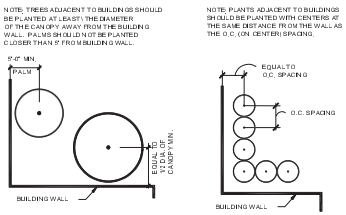

7 PLANTING ADJACENT TO BUILDING

PLAN NTS

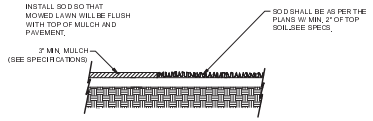

8 SOD INSTALLATION

SECTION NTS

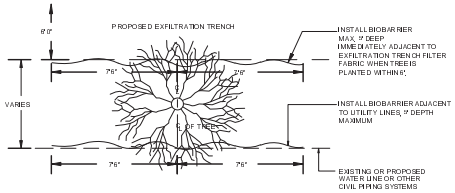

9 BIO-BARRIER

SECTION NTS

CRAVEN • THOMPSON AND ASSOCIATES, INC.
ENGINEERS • PLANNERS • SURVEYORS
3563 N.W. 53RD STREET, FORT LAUDERDALE, FLORIDA 33309
FAX: (954) 739-6409 TEL.: (954) 739-6400
FLORIDA LICENSED ENGINEERING, SURVEYING & MAPPING BUSINESS No. 271
FLORIDA LICENSED LANDSCAPE ARCHITECTURE BUSINESS No. C000214

NO.	DATE	ISSUED FOR	BY

DESIGNED DJS
DRAWN DJS
CHECKED JDH
PROJ. ENGR. DJS

Douglas J. Schultz LA
No. LA6666937

HAZEN AND SAWYER
Environmental Engineers & Scientists
4000 Hollywood Boulevard, Suite 750N
Hollywood, Florida 33021
Certificate of Authorization Number: 2771

SCALE NONE

CLIENTS PROJECT: –
ENGINEERS PROJECT: 44238-004
CAD REFERENCE: 44238-004BP3-L3

NORTH MIAMI FLORIDA
CITY OF NORTH MIAMI
PUBLIC WORKS UTILITIES

WINSON WATER TREATMENT PLANT
BID PACKAGE 3: WTP REHABILITATION
LANDSCAPE DETAILS

DATE: JUNE 2014
SHEET: 331 OF 335
DRAWING: L-3

PERMITTING

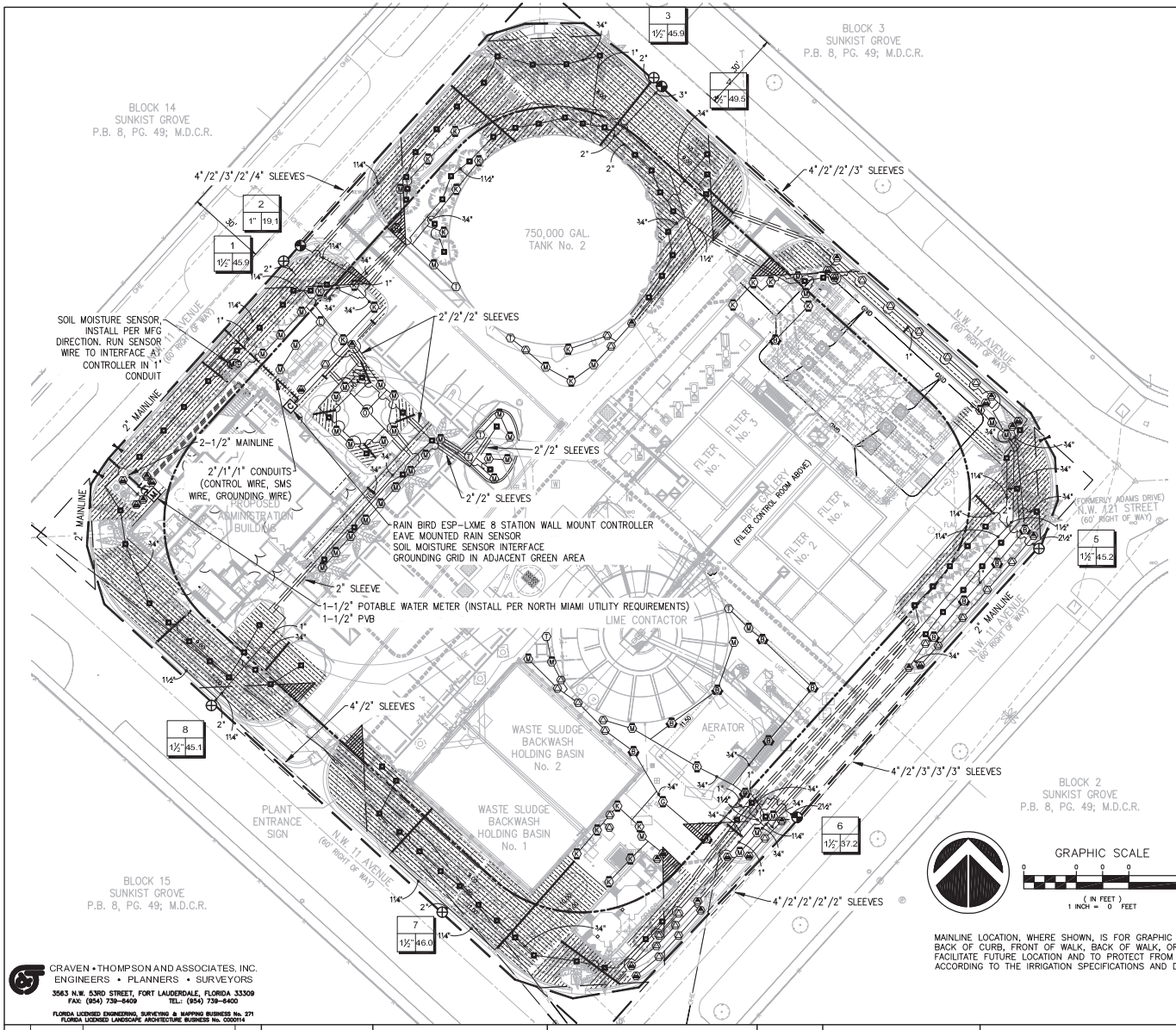

Masuen Consulting LLC
Water Resource Consultants
5079 North Dixie Highway, #323
Oakland Park, FL 33334
Telephone (866) 928-1533
Fax (800) 928-1534

IRRIGATION LEGEND

QTY	SYM	DESCRIPTION	DET.
	5 / 1½" 45.2	STATION NUMBER; MINUTE-CATALOG FLOW; VALVE SIZE; GALLONS PER	
1	M	LINE SIZE BY 2" TAP, MAXIMUM 10' OF 2" POLYETHYLENE SERVICE LINE AND A PROPOSED 1-1/2" POTABLE WATER METER (INSTALL PER NORTH MIAMI UTILITY REQUIREMENTS)	A
1		1-1/2" FEBCO 765 PRESSURE VACUUM BREAKER	A
3		RAIN BIRD PEB SERIES RCV (SIZED PER PLAN) WITH A NIBCO T-113 GATE VALVE IN A CARSON 1220 JUMBO VALVE BOX WITH BOLT DOWN LID.	B1
5		RAIN BIRD PEB SERIES REMOTE CONTROL VALVE WITH A NIBCO T-113 GATE VALVE & NETAFIM MANUAL DISC FILTER MODEL DF100/150/200 (PER PLANS)-140, EACH IN A SEPARATE CARSON 1220 JUMBO VALVE BOX W/ BOLD DOWN LID.	B1 B2
1	C	RAIN BIRD ESPLXME WALL MOUNT 8 STATION CONTROLLER, GROUNDING GRID, MINI CLIK RAIN SENSOR #502 AND BASELINE WATERTEC S100 SOIL MOISTURE SENSOR INTERFACE MOUNTED ADJACENT TO CONTROLLER	C1
1	MS	BASELINE WATERTEC S100 SOIL MOISTURE SENSOR biSENSOR INSTALLED ON SITE PER MANUFACTURER'S RECOMMENDATIONS. COMMUNICATION WIRE TO BE CONNECTED TO SMS INTERFACE AT CONTROLLER VIA 1" CONDUIT	C2
3		NIBCO T-113 BRASS MAINLINE ISOLATION VALVE (LINE SIZE) IN A CARSON 1419 VALVE BOX.	D
		CLASS 200 PVC LATERAL LINE W/ SCH 40 SOLVENT WELD PVC FITTINGS (SIZE PER PLAN, MINIMUM PIPE SIZE SHALL BE 3/4", NO 1/2" PIPES PERMITTED)	L
		SCHEDULE 40 SOLVENT-WELD PVC MAINLINE W/SCH 40 SOLVENT-WELD PVC FITTINGS (SIZE PER PLAN)	L
		SCH 40 GRAY PVC CONDUIT W/SCH 40 SOLVENT-WELD PVC FITTINGS, SHOWN WHERE NOT WITH MAINLINE (SIZE PER PLAN)	
		NETAFIM TECHLINE TLCV9-12 - 12" O.C TRIANGULAR SPACED GRID EMITTER PATTERN-SEE DETAILS	M,N
		CLASS 200 PVC HEADER W/SCH 40 SOLVENT-WELD PVC FITTINGS (SIZE PER PLAN)	M,N
		CLASS 200 PVC SLEEVES W/SCH 40 SOLVENT-WELD PVC FITTINGS (SIZE PER PLAN)	O

QUANTITIES GIVEN ARE FOR CONTRACTOR CONVENIENCE ONLY. THE ACCURACY IS NOT GUARANTEED. ALL QUANTITIES SHALL BE VERIFIED.

*DET (ON THE LEGEND) - THE LETTER IN THIS COLUMN DENOTES THE CORRESPONDING DETAIL SHOWN ON THE DETAIL SHEET.

IRRIGATION HEAD LEGEND

SYMBOL QUANTITY	SYMBOL	DESCRIPTION	DETAIL	DESIGN (P.S.I)	DESIGN GPM PER SYMBOL
99		EACH SYMBOL DENOTES TWO (2) RAIN BIRD 1804-SAM-1401 FLOOD BUBBLERS	Q	30	0.50
6		RAIN BIRD 1806-SAM-PRS-30 W/ HUNTER MPCORNERHT NOZZLE ADJ ARC 0-90	R	30	VAR
45		RAIN BIRD 1806-SAM-PRS-30 W/ HUNTER MP1000 NOZZLE MAROON ADJ ARC 90-210	R	30	VAR
1		RAIN BIRD 1806-SAM-PRS-30 W/ HUNTER MP1000 NOZZLE OLIVE ADJ ARC 360	R	30	0.65
21		RAIN BIRD 1806-SAM-PRS-30 W/ HUNTER MP2000 NOZZLE BLACK ADJ ARC 90-210	R	30	VAR
1		RAIN BIRD 1806-SAM-PRS-30 W/ HUNTER MP2000 NOZZLE GREEN ADJ ARC 210-270	R	30	VAR
1		RAIN BIRD 1806-SAM-PRS-30 W/ HUNTER MP2000 NOZZLE RED ARC 360	R	30	1.27
14		RAIN BIRD 1806-SAM-PRS-30 W/ HUNTER MP3000 NOZZLE BLUE ADJ ARC 90-210	R	30	VAR
14		RAIN BIRD 1806-SAM-PRS-30 W/ HUNTER MPCORNER NOZZLE RST	R	30	VAR
13		RAIN BIRD 1806-SAM-PRS-30 W/ HUNTER MPCORNER NOZZLE LST	R	30	VAR
28		RAIN BIRD 1806-SAM-PRS-30 W/ HUNTER MPCORNER NOZZLE SST	R	30	VAR

GRAPHIC SCALE
0 0 0 0 0
(IN FEET)
1 INCH = 0 FEET

MAINLINE LOCATION, WHERE SHOWN, IS FOR GRAPHIC CLARITY PURPOSES ONLY. INSTALL AT THE BACK OF CURB, FRONT OF WALK, BACK OF WALK, OR ADJACENT TO OTHER HARDSCAPES TO FACILITATE FUTURE LOCATION AND TO PROTECT FROM DAMAGE. ENSURE MAINLINE IS INSTALLED ACCORDING TO THE IRRIGATION SPECIFICATIONS AND DETAILS.

811 KNOW WHAT'S BELOW ALWAYS CALL 811 BEFORE YOU DIG
It's fast, it's free, it's the law.
Call 811 two business days before digging

CRAVEN • THOMPSON AND ASSOCIATES, INC.
ENGINEERS • PLANNERS • SURVEYORS
3563 N.W. 53RD STREET, FORT LAUDERDALE, FLORIDA 33309
FAX: (954) 739-6409 TEL.: (954) 739-6400
FLORIDA LICENSED ENGINEERING, SURVEYING & MAPPING BUSINESS No. 271
FLORIDA LICENSED LANDSCAPE ARCHITECTURE BUSINESS No. C000214

NO.	DATE	ISSUED FOR	BY

DESIGNED JMJ
DRAWN JMJ
CHECKED TKM
PROJ. ENGR. DJS

Douglas J. Schultz LA
No. LA6666937

HAZEN AND SAWYER
Environmental Engineers & Scientists
4000 Hollywood Boulevard, Suite 750N
Hollywood, Florida 33021
Certificate of Authorization Number: 2771

SCALE 1"=20'-0"

CLIENTS PROJECT: -
ENGINEERS PROJECT: 44238-004
CAD REFERENCE: 44238-004BP3-IR1

NORTH MIAMI FLORIDA
CITY OF NORTH MIAMI
PUBLIC WORKS UTILITIES

WINSON WATER TREATMENT PLANT
BID PACKAGE 3: WTP REHABILITATION
IRRIGATION PLAN

DATE: JUNE 2014
SHEET: 332 OF 335
DRAWING: IR-1

PERMITTING

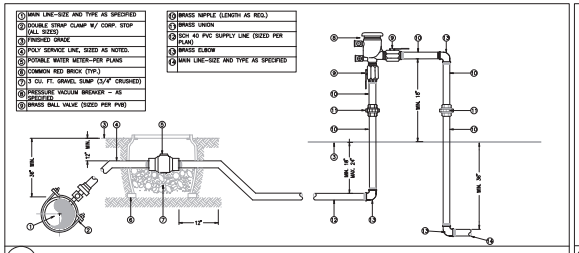

A METER WITH PRESSURE VACUUM BREAKER

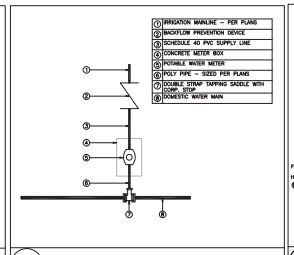

A METER W/BF DIAGRAMATIC

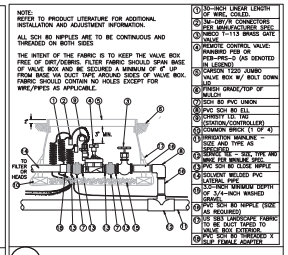

B1 RAIN BIRD RCV W/GATE VALVE

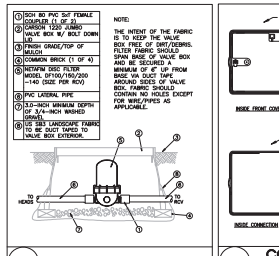

B2 NETAFIM FILTER

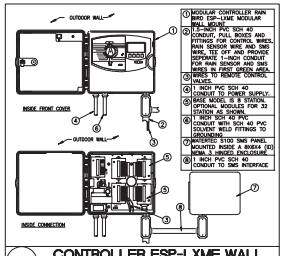

C1 CONTROLLER ESP-LXME WALL MOUNT

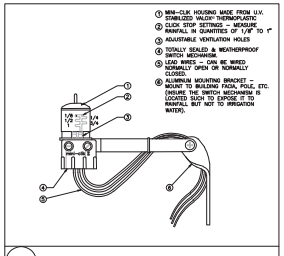

C MINI-CLICK II RAIN SENSOR

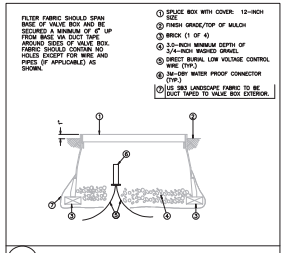

C WIRE SPLICE

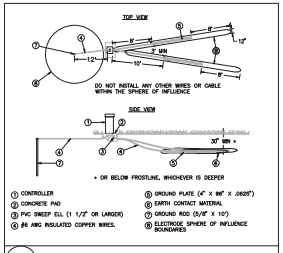

C GROUNDING DETAIL

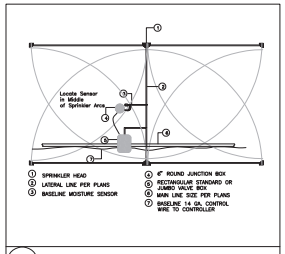

C2 SOIL MOISTURE SENSOR

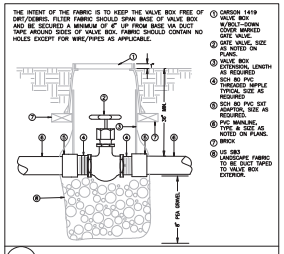

D T-113 GATE VALVE

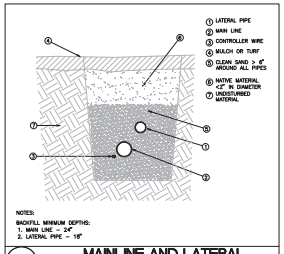

L MAINLINE AND LATERAL BACKFILL DETAIL

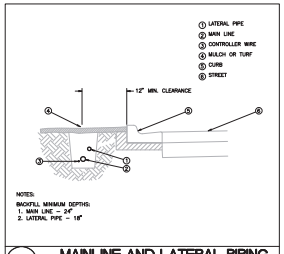

L MAINLINE AND LATERAL PIPING DETAIL

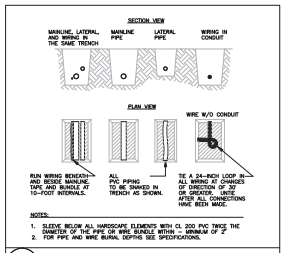

L PIPE AND WIRE TRENCHING

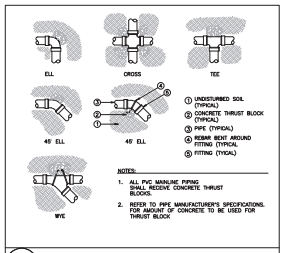

L THRUST BLOCK

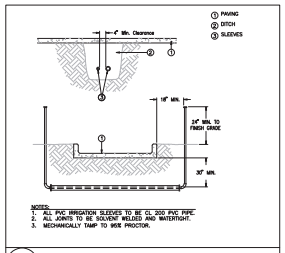

O SLEEVING

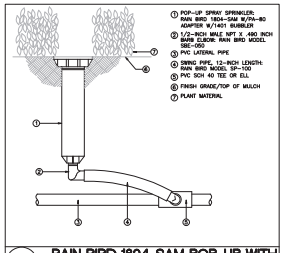

Q RAIN BIRD 1804-SAM POP-UP WITH 1401 BUBBLER

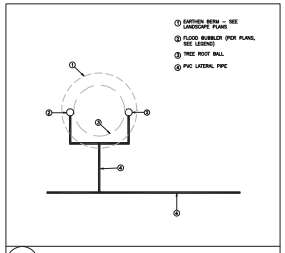

Q BUBBLER PLACEMENT

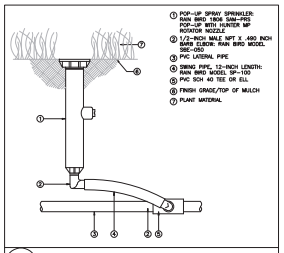

R RAIN BIRD 1806 SAM-PRS SPRAY

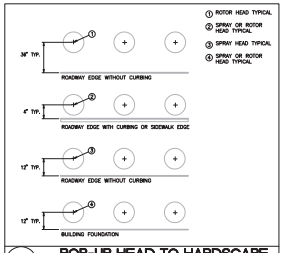

T POP-UP HEAD TO HARDSCAPE LOCATION DETAIL-A

Masuen Consulting LLC
Water Resource Consultants
5079 North Dixie Highway, #323
Oakland Park, FL 33334
Telephone (866) 928-1533
Fax (800) 928-1534

CRAVEN • THOMPSON AND ASSOCIATES, INC.
ENGINEERS • PLANNERS • SURVEYORS
3563 N.W. 53RD STREET, FORT LAUDERDALE, FLORIDA 33309
FAX: (954) 739-6409 TEL.: (954) 739-6400
FLORIDA LICENSED ENGINEERING, SURVEYING & MAPPING BUSINESS No. 271
FLORIDA LICENSED LANDSCAPE ARCHITECTURE BUSINESS No. C000214

NO.	DATE	ISSUED FOR	BY

DESIGNED JMJ
DRAWN JMJ
CHECKED TKM
PROJ. ENGR. DJS

Douglas J. Schultz LA
No. LA6666937

HAZEN AND SAWYER
Environmental Engineers & Scientists
4000 Hollywood Boulevard, Suite 750N
Hollywood, Florida 33021
Certificate of Authorization Number: 2771

SCALE 1"=20'-0"

CLIENTS PROJECT: –
ENGINEERS PROJECT: 44238-004
CAD REFERENCE: 44238-004BP3-IR2

NORTH MIAMI FLORIDA
CITY OF NORTH MIAMI
PUBLIC WORKS UTILITIES

WINSON WATER TREATMENT PLANT
BID PACKAGE 3: WTP REHABILITATION
IRRIGATION DETAILS

DATE: JUNE 2014
SHEET: 333 OF 335
DRAWING: IR-2

PERMITTING

NETAFIM™ IRRIGATION NOTES

PART 1 – SUBMITTALS

1.01 Submit (5) five copies of manufacturers catalog cut sheets of the following listed items:

1. Netafim dripper tubing specified with pressure compensating emitters
2. Netafim insert barbed fittings
3. Netafim in–line disc filter
4. Netafim pressure regulator
5. Stainless steel clamps
6. Metal ground stakes for tubing
7. PVC threaded and insert fittings

1.02 Spare parts – upon completion of the installation, turn over the following spare parts and specialty tool to the owner's authorized representative. Include with the following quantities of items a list of each part with appropriate part number (for ordering replacement products) and local supply store of where these parts can be purchased:

(10') Of dripper line for each dripper interval and discharge rate used on the project
(6) Barbed couplings
(6) Barbed 90 degree elbow fittings
(6) Barbed tee fittings
(6) 180 degree 2–way adapter tee fittings
(6) Male adapters with 3/4" fpt
(1) Spare filter element of the same mesh size used on the project

PART 2 – MATERIALS

2.10 Piping materials – dripper tubing (model #TLCV92–12) with pressure compensating emitters shall be of nominal sized one–half inch low density, ultraviolet resistant, linear polyethylene tubing with internal pressure–compensating, self–cleaning, integral drippers (each with a built in check valve) at a specified interval. The tubing shall be brown in color and shall conform to an outside diameter (O.D.) of .66" and an inside diameter (I.D.) of .57". The low volume tubing shall be capable of discharging .92 gallons per hour (G.P.H.) between operating pressures of 15 to 50 PSI for each dripper. The individual self–cleaning, pressure–compensating drippers shall be co–extruded to the inside of the tubing wall. The emitters are constructed of three individual pieces:

1. A black–colored dripper containing a filtration system on the inlet side, compensation cell, and recessed chamber with a water outlet.
2. A hard plastic diaphragm retainer, colored black (0.92 gpm) with chamfered edges and a recessed groove in the center, the full length of the diaphragm.
3. A flexible black rubber diaphragm that allows excessive pressure to build up within the chamber to purge sediment or other debris that may not have been captured by the disc filter.

2.20 Insert barbed fittings – shall be constructed of molded, ultraviolet resistant, brown colored plastic having a nominal inside dimension (I.D.) of .57". Each fitting shall have a minimum of two ridges or barbs per outlet. All fittings shall be of one manufacturer and shall be available in one of the following end configurations:

– Barbed insert fittings
– Male pipe threads (MPT) with barbed insert fittings
– Female pipe threads (FPT) with barbed insert fittings

2.30 Pressure regulation valves – N/A

2.40 Disc filter – the disc filter body shall be molded black plastic with male pipe threads (MPT) for both the inlet and the outlet ports. A threaded cap on one end of the body shall be capable of periodic servicing by unscrewing the cap from the main filter body. On the 3/4" model, a manual shutoff valve shall be co–molded to the opposing end of the removable cap as a part of the main body. This device shall be capable of closing off the inlet port so the disc element can be removed when the main line is still pressurized. The filter elements shall be either a disc–type or a canister screen filter. The disc–type shall be color coded in one of four colors denoting filtration of 80,120,140, and 200 mesh. The canister type screen shall be available in three levels of filtration, 80,120, and 140 mesh.

2.50 Stainless steel clamps – tubing clamps shall be constructed to 304 ANSI stainless steel and shall be one 'ear' type. The 'ear' shall be capable of being pinched with a pinching tool to secure the tubing around the insert barbed fitting. The interior clamp wall shall be smooth to prevent crimping or pinching of the tubing. Wall thickness of clamps shall be .0236" with an overall band width of 1/4". Properly secured clamps shall be capable of withstanding a maximum operating pressure of 441 psi.

PART 3 – EXECUTION

3.10 Staking for lateral dripper line layout – verify existing field dimensions of the area to be irrigated using the irrigation plans for reference/accuracy. Begin dripper tubing layout 4" away from both hardscape surfaces; i.e.., concrete sidewalks, curbs, asphalt, and/or undefined edges; i.e.., shovel–cut headers. Mark tubing intervals on the ground with flags, paint, or some other markings that can be maintained throughout the installation.

3.11 Installation of dripper tubing – tubing can be installed in one of three following methods:

1. Over excavation – In small areas, where it is feasible, over–excavate the entire area to a depth of 4" below finish grade. Plant all specimen trees and shrubs, then place tubing at the row spacing interval indicated on the plans.
2. Trenching – hand or mechanically trench to the pipe depth (4") and back fill flush with finish grade. Avoid mechanically trenching within the drip line of existing trees and shrubs. Hand trench around existing trees and shrubs when root sizes greater than 1" in diameter are encountered. Remove all rock 1–1/2" in diameter and larger when excavating and remove from site. Do not back fill trenches with rock that will come in direct contact with tubing or rigid PVC piping.

3.12 Cover – Install all underground piping horizontally and as level as possible. PVC piping should be installed to the depths and in the manner outlined in the general irrigation notes. Netafim tubing should be installed to a depth of 4" in shrub areas and 6" in turf areas. Netafim tubing should be installed with the water outlets in upward or downward facing position. Offset the outlets in adjacent rows to obtain a triangular pattern throughout the tubing layout. In irregular areas, some water outlets may end up too close to fixed improvements and may have to be capped off with a dripper plug ring.

3.13 Barbed fittings – Connect dripper tubing to barbed fittings by pushing on and over both barbs until the tubing has seated against another piece of tubing or has butted against another portion of the barbed fitting. For water pressures in excess of 40 psi, use stainless steel clamps as outlined in section 3.50 (pipe clamping).

3.14 Pipe clamping – When design operating pressure exceeds 40 psi, stainless steel pipe clamps shall be used. Slip clamps over tubing before slipping tubing over insert barbed fitting. Place clamp between the first and second ridge of the barbed fittings and crimp the 'ear' of the clamp tightly. Crimp the 'ear' a second time to ensure proper seating.

3.15 Pressure regulator – If a pressure regulator is specified, install it below grade, downstream, and in line with the remote control valve. Refer to the detail sheet. If a prv is specified it will be detailed with the remote control valve. Place the regulator with the arrow, that is molded into the side of the body, pointing in the direction of the flow of water. Provide straight piping on the outlet side of the regulator for a dimension not less than three lengths of the overall body dimension.

3.16 Remote control valve – Install the remote control valves level and below grade with a minimum of 4" of clearance to the top of the inside of the valve box cover. The arrow cast or molded into the side/bottom of the remote control valve should be pointing in the direction of the flow of water. Place a minimum of one cubic foot of 3/4" gravel in the bottom of the valve box. Support each corner of the valve box with a common red brick. At finish grade, the top of the valve box shall be two inches above surrounding grades.

3.17 Disc filter – Install the disc filter, horizontally level, below grade and after the remote control valve (refer to the detail and note sheets). The position of the disc filter in the valve box shall be off–center to allow for removal of the disc element for periodic servicing. Include a minimum of 3" deep of 3/4" gravel in the bottom of the valve box. Support the valve box using a common red brick under each corner of the valve box.

3.18 Flushing – Prior to back filling and before connection of the line flushing valves, flush the entire system to remove any dirt or sediment that may have entered the system during installation.

3.19 Testing – Prior to back filling, open the remote control valve and operate each zone. Check for leakage around barbed and threaded fittings. Make the necessary repairs to stop all leaks. After repairs, re–test to insure all leaks have been repaired. Continue this process until no more leaks are observed.

3.20 Back fill – After placement of tubing, connection to rigid PVC supply header, and initial system flushing, and testing, back filling can begin. Fill remainder of trenches, or where over–excavation and grade level installation was used, place shovel fulls of dirt on piping to keep them in place and maintain row spacing intervals as required. Bring soil up to finished grade and remove any rocks larger than 1" during final grading and contouring. Compact back fill by hand to a minimum of 90% relative compaction. Maintain adequate soil levels as needed to achieve the required compaction requirement.

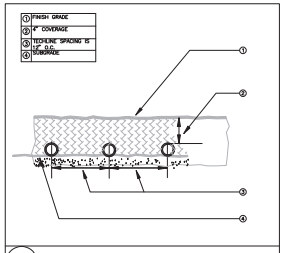

M TECHLINE SUB GRADE LAYOUT

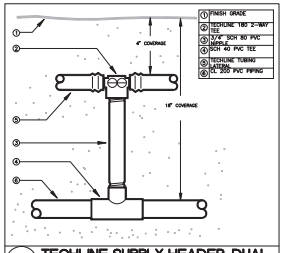

M TECHLINE SUPPLY HEADER–DUAL FEED

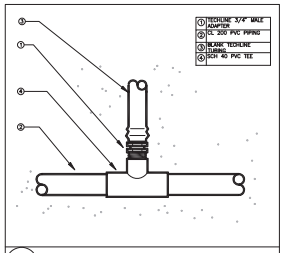

M TECHLINE TO PVC CONNECTION

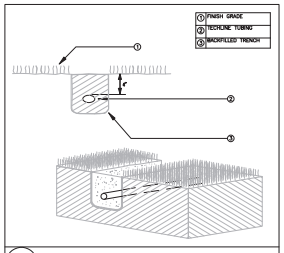

M TECHLINE TRENCHING DETAIL

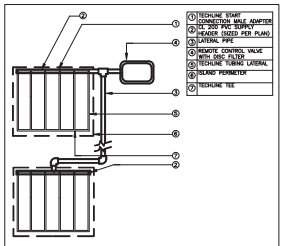

N TECHLINE MULTIPLE PLANTER LAYOUT

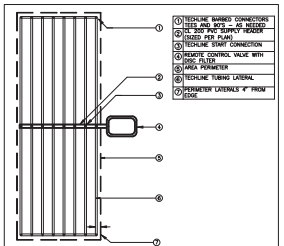

N TECHLINE DUAL FEED LAYOUT

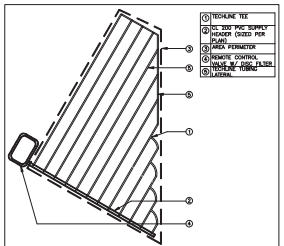

N TECHLINE ODD AREA LAYOUT

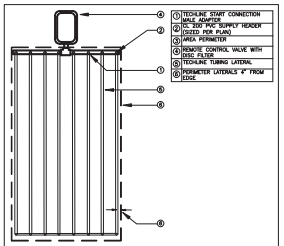

N TECHLINE SINGLE FEED LAYOUT

Masuen Consulting LLC
Water Resource Consultants
5079 North Dixie Highway, #323
Oakland Park, FL 33334
Telephone (866) 928–1533
Fax (800) 928–1534

CRAVEN • THOMPSON AND ASSOCIATES, INC.
ENGINEERS • PLANNERS • SURVEYORS
3563 N.W. 53RD STREET, FORT LAUDERDALE, FLORIDA 33309
FAX: (954) 739–6409 TEL.: (954) 739–6400
FLORIDA LICENSED ENGINEERING, SURVEYING & MAPPING BUSINESS No. 271
FLORIDA LICENSED LANDSCAPE ARCHITECTURE BUSINESS No. C000214

NO.	DATE	ISSUED FOR	BY

DESIGNED JMJ
DRAWN JMJ
CHECKED TKM
PROJ. ENGR. DJS

Douglas J. Schultz LA
No. LA6666937

HAZEN AND SAWYER
Environmental Engineers & Scientists
4000 Hollywood Boulevard, Suite 750N
Hollywood, Florida 33021
Certificate of Authorization Number: 2771

SCALE 1"=20'–0"

CLIENTS PROJECT: –
ENGINEERS PROJECT: 44238–004
CAD REFERENCE: 44238–004BP3–IR3

NORTH MIAMI FLORIDA
CITY OF NORTH MIAMI
PUBLIC WORKS UTILITIES

WINSON WATER TREATMENT PLANT
BID PACKAGE 3: WTP REHABILITATION
IRRIGATION DETAILS & NOTES

DATE: JUNE 2014
SHEET: 334 OF 335
DRAWING: IR–3

PERMITTING

IRRIGATION NOTES & SPECIFICATIONS

Irrigation design based on the Craven Thompson & Associates Landscape Plan dated June 2014. Contractor shall refer to these plans to coordinate sprinkler and pipe locations.

The system has been designed to conform with the requirements of all applicable codes, laws, ordinances, rules, regulations and conventions. Should any conflict exist, the requirements of the codes shall prevail. It is the responsibility of the owner/installation contractor to ensure the entire system is installed as designed. Irrigation contractor responsible for obtaining all required permits according to federal, state and local laws.

The scope of work is shown on the plans, notes and details. The Irrigation Contractor shall be certified as a CERTIFIED IRRIGATION CONTRACTOR by the Irrigation Association. The certification shall be current and in good standing.

THE WORK

The work specified in this section consists of furnishing all components necessary for the installation, testing, and delivery of a complete, fully functional automatic landscape irrigation system that complies with the irrigation plans, specifications, notes, and details. This work shall include, but not be limited to, the providing of all required material if applicable (pump(s), backflows, pipes, valves, fittings, controllers, wire, primer, glue, etc.), layout, protection to the public, excavation, assembly, installation, back filling, compacting, repair of road surfaces, controller and low voltage feeds to valves, cleanup, maintenance, guarantee and as-built plans.

All irrigated areas shall provide 100% head-to-head coverage from a fully automatic irrigation system with a rain (and freeze as appropriate) shut off device. If the rain shut off device is a rain sensor, it shall be installed to prevent activation by adjacent heads. Zones are prioritized first by public safety and then by hydraulic concerns. This sequencing will be a mandatory punch list item.

These plans have been designed to satisfy/exceed the Florida Building Code (FBC) Appendix F and the Florida Irrigation Society Standards and Specifications for Turf and Landscape Irrigation Systems, fourth edition. All products should be installed per manufacturer's recommendation. Contractor shall verify all underground utilities 72 hours prior to commencement of work.

It is the responsibility of the irrigation contractor to familiarize themselves with all grade differences, location of walls, retaining walls, structures and utilities. Do not willfully install the sprinkler system as shown on the drawings when it is obvious in the field that unknown obstruction, grade differences or differences in the area dimensions exist that might not have been considered in the engineering. Such obstructions, or differences, should be brought to the attention of the owner's authorized representative. In the event this notification is not performed, the irrigation contractor shall assume full responsibility for any revisions necessary.

Irrigation contractor shall repair or replace all items damaged by their work. Irrigation contractor shall coordinate their work with other contractors for the location and installation of pipe sleeves and laterals through walls, under roadways and paving, etc.

The contractor shall take immediate steps to repair, replace, or restore all services to any utilities which are disrupted due to their operations. All costs involved in disruption of service and repairs due to negligence on the part of the contractor shall be their responsibility.

POINT OF CONNECTION (P.O.C.)

The P.O.C. is a new line size X 2" tap, maximum of 10' of 2" polyethylene service line, a new 1-1/2" potable meter (install per North Miami Utility requirements) and a 1-1/2" pressure vacuum breaker. The P.O.C. must be capable of delivering a minimum of 50 GPM at 50 PSI downstream of the water meter.

Contractor to verify these minimum conditions can be met prior to ordering of materials and the beginning of installation. If the conditions can not be met, the contractor must notify the designer prior to proceeding with the work. If the contractor does not do so, the contractor proceeds at their own risk and becomes responsible for any future work required to make the system perform as required.

THE PIPE

Pipe locations shown on the plan are schematic and shall be adjusted in the field. When laying out mainlines place a maximum of 18" away from either the back of curb, front of walk, back of walk, or other hardscape to allow for ease in locating and protection from physical damage. Install all lateral pipe near edges of pavement or against buildings whenever possible to allow space for plant root balls. Always install piping inside project property's boundary.

All pipes are to be placed in planting beds. If it is necessary to have piping under hardscapes, such as roads, walks, and patios, the pipes must be sleeved using Class 200 PVC with the sleeve diameter being twice the size of the pipe it is carrying with a minimum sleeve size of 2".

Pipe sizes shall conform to those shown on the drawings. No substitutions of smaller pipe sizes shall be permitted, but substitutions of larger sizes may be approved. All damaged and rejected pipe shall be removed from the site at the time of said rejection.

Mainline shall be Sch 40 solvent-weld PVC with Sch 40 PVC solvent-weld fittings (size per plan).

Contractor to ensure all mainline piping is properly restrained using mechanical joint fittings, restraining collars, threaded rods, thrust blocks, etc.., as and where required. Contractor shall refer to pipe manufacturers recommended installation practices for further direction.

PVC pipe joint compound and primer: The PVC cement shall be Weld-On 711 (grey, slow-drying, heavy duty) and the primer shall be Weld-On P70 (purple tinted, compatible with cement), or approved equals.

ELECTRICAL POWER SUPPLY

Electrical supply for irrigation controllers & sensors to be provided by irrigation contractor. Contractor to coordinate with local utilities for the installation of, and connection to, site available power supplies for required electrical components as set forth in the irrigation plans.

All electrical work is to comply with the National Electrical Code and any, and all, other applicable electrical codes, laws and regulations. A licensed electrician shall perform all electrical hook-ups. Power for each controller/CCU shall be a dedicated 120 volt, 20 amp circuit unless otherwise specified in the plans. Power for each pump to be according to pump specifications indicated in these plans.

WIRING

Irrigation control wire shall be thermoplastic solid copper, single conductor, low voltage irrigation controller wire; suitable for direct burial and continuous operation at rated voltages.

Tape and bundle control wires every 10' and run alongside the mainline. At all turns in direction make a 2' coil of wire. At all valve boxes coil wire around a 3/4" piece of PVC pipe to make a coil using 30 linear inches of wire. Make electrical connections with 3MDBY/R connectors.

Number all wires, using an electrical book of numbers, according to the plans. Number wires in all valve boxes, junction boxes and at the controller.

Wire sized, numbered and colored as follows:
#14 white for common
#14 spare black common
#14 individual color coded hot wire
#14 spare yellow hot wire

Spare wires
Leaving controller, run two spare wires in both directions (four spare wires total). Install as 2 common spares (4 total) and 2 hot wires (4 total). Loop these wires into each RCV along their path and terminate in the last valve box controlled by the wires respective controller. The loop into each valve box shall extend up into the valve box a minimum of 8" and be readily accessible by opening the valve box lid. These wires must be all numbered and color coded as required in these plans.

Controller and Pump station Control Panel grounding – Contractor to utilize 4"X8"X5/8" copper grounding plates, 5/8"X10' copper clad grounding rods, 'One Strike' CAD wells at all connection points, #6 insulated copper wire, and earth contact material. Install these and other required components as outlined in the detail. Contractor to verify that the earth to ground resistance does not exceed 10 ohms. Contractor shall provide a written certification, on a licensed electrical contractors letter head, showing the date of the test, controller/pump location, and test results. Each controller/pump shall be so grounded and tested. Each component must have its own separate grounding grid, unless they are sitting side by side, in which case up to two controllers can share a common grounding grid.

LAYOUT

Lay out irrigation system mainlines and lateral lines. Make the necessary adjustments as required to take into account all site obstructions and limitations prior to excavating trenches.

Stake all sprinkler head locations. Adjust location and make the necessary modifications to nozzle types, etc. required to ensure 100% head to head coverage. Refer to the Edge of Pavement Detail on the Irrigation Detail Sheet.

Spray heads shall be installed 4" from sidewalks or curbed roadways and 12" from uncurbed roadways and building foundations. Rotors shall be installed 4" from sidewalks or curbed roadways, 12" from building foundations, and 36" from uncurbed roadways.

Locate valves prior to excavation. Ensure that their location provides for easy access and that there is no interference with physical structures, plants, trees, poles, etc. Valve boxes must be placed a minimum of 12" and a maximum of 15" from the edge of pavement, curbs, etc. and the top of the box must be 2" above finish grade. No valve boxes shall be installed in turf areas without approval by the irrigation designer – only in shrub beds. Never install in sport field areas.

VALVES

Sequence all valves so that the farthest valve from the P.O.C. operates first and the closest to the P.O.C. operates last. The closest valve to the P.O.C. should be the last valve in the programmed sequence.

Adjust the flow control on each RCV to ensure shut off in 10 seconds after deactivation by the irrigation controller.

Using an electric branding iron, brand the valve I.D. letter/number on the lid of each valve box. This brand must be 2"-3" tall and easily legible.

EQUIPMENT

All pop-up heads and shrub risers shall be pressure compensating. All pop-up heads shall be mounted on flex-type swing joints. All rotors shall be installed with PVC triple swing joints unless otherwise detailed.

All sprinkler equipment, not otherwise detailed or specified on these plans, shall be installed as per manufacturer's recommendations and specifications, and according to local and state laws.

TRENCHING

Excavate straight and vertical trenches with smooth, flat or sloping bottoms. Trench width and depth should be sufficient to allow for the proper vertical and horizontal separation between piping as shown in the pipe installation detail on the detail sheet.

Protect existing landscaped areas. Remove and replant any damaged plant material upon job completion. The replacement material shall be of the same genus and species, and of the same size as the material it is replacing. The final determination as to what needs to be replaced and the acceptability of the replacement material shall be solely up to the owner or owner's representative.

INSTALLATION

Solvent Weld Pipe: Cut all pipe square and deburr. Clean pipe and fittings of foreign material; then apply a small amount of primer while ensuring that any excess is wiped off immediately. Primer should not puddle or drip from pipe or fittings. Next apply a thin coat of PVC cement; first apply a thin layer to the pipe, next a thin layer inside the fitting, and finally another very thin layer on the pipe. Insert the pipe into the fitting. Insure that the pipe is inserted to the bottom of the fitting, then turn the pipe a 1/4 turn and hold for 10 seconds. Make sure that the pipe doesn't recede from the fitting. If the pipe isn't at the bottom of the fitting upon completion, the glue joint is unacceptable and must be discarded.

Pipes must cure a minimum of 30 minutes prior to handling and placing into trenches. A longer curing time may be required; refer to the manufacturer's specifications. The pipe must cure a minimum of 24 hours prior to filling with water.

BACK FILL

The Back fill 6" below, 6" above, and around all piping shall be of clean sand and anything beyond that in the trench can be of native material but nothing larger than 2" in diameter.

Main line pipe depth measured to the top of pipe shall be:
24" minimum for 3/4"-2 1/2" PVC with a 30" minimum at vehicular crossings

Lateral line depths measured to top of pipe shall be:
18" minimum for 3/4"-3" PVC with a 30" minimum at vehicular crossings

Contractor shall backfill all piping, both mainline and laterals, prior to performing any pressure tests. The pipe shall be backfilled with the exception of 2' on each side of every joint (bell fittings, 90's, tees, 45's, etc.). These joints shall not be backfilled until all piping has satisfactorily passed its appropriate pressure test as outlined below.

FLUSHING

Prior to the placement of valves, flush all mainlines for a minimum of 10 minutes or until lines are completely clean of debris, whichever is longer.

Prior to the placement of heads, flush all lateral lines for a minimum of 10 minutes or until lines are completely clean of debris, whichever is longer.

Use screens in heads and adjust heads for proper coverage avoiding excess water on walls, walks and paving.

TESTING

Soil: At a minimum of 2 locations on the site, soil tests for infiltration and texture shall be performed according to the USDA Soil Quality Test Kit Guide. The tests shall be documented in a USDA Soil Worksheet. (All of the above is available at http://soils.usda.gov/sqi/assessment/ test_kit.html) The completed worksheet shall be submitted to the owners representative for review/approval. Do not proceed without written direction from the owner/owner's representative.

Schedule testing with Owner's Representative a minimum of three (3) days in advance of testing.

Mainline: Remove all remote control valves and cap using a threaded cap on SCH 80 nipple. Hose bibs and gate valves shall not be tested against during a pressure test unless authorized by written permission from the owner. Fill mainline with water and pressurize the system to 125 PSI. Monitor the system pressure at two gauge locations; the gauge locations must be at opposite ends of the mainline. With the same respective pressures, monitor the gauges for two hours. There can be no loss in pressure at either gauge for solvent-welded pipe.

If these parameters are exceeded, locate the problem; repair it; wait 24 hours and retry the test. This procedure must be followed until the mainline passes the test.

Lateral Lines: The lateral lines must be fully filled to operational pressure and visually checked for leaks. Any leaks detected must be repaired.

Operational Testing –Once the mainline and lateral lines have passed their respective tests, and the system is completely operational, a coverage test and demonstration of the system is required. The irrigation contractor must demonstrate to the owner, or his/her representative, that proper coverage is obtained and the system works automatically from the controller. This demonstration requires each zone to be turned on, in the proper sequence as shown on the plans, from the controller. Each zone will be inspected for proper coverage and function. The determination of proper coverage and function is at the sole discretion of the owner or owner's representative.

Upon completion of the operational test, run each zone until water begins to puddle or run off. This will allow you to determine the number of irrigation start times necessary to meet the weekly evapotranspiration requirements of the planting material in each zone. In fine sandy soils, it is possible no puddling will occur. If this is experienced, then theoretical calculations for run times will be required for controller programming.

SUBMITTALS

Pre-Construction: Deliver five (5) copies of submittals to Owner's Representative within ten (10) working days from date of Notice to Proceed. Furnish information in 3-ring binder with table of contents and index sheet. Index sections for different components and label with specification section number and name of component. Furnish submittals for components on material list. Indicate which items are being supplied on catalog cut sheets when multiple items are shown on one sheet. Incomplete submittals will be returned without review. In lieu of hardcopies, an electronic package in PDF format can be submitted.

After project completion:
As a condition of final acceptance, the irrigation contractor shall provide the owner with:

1. Irrigations As-builts – shall be provided utilizing a sub-foot Global Navigation Satellite System (GNSS) to accurately locate all mainlines, sleeves, remote control valves, gate valves, independent wire runs, wire splice boxes, controllers, high voltage supply sources/conduit path, control mechanisms, sensors, wells and water source connections in Florida East State Plane, NAD 83, and CORS 96 format. The data collected shall be in POINT format and include an ID for each data point with Manufacturer, Type, Size, and Depth. All mainline and independent runs of wire shall be located every 30' for straight runs and at every change of direction. Sleeves will be located at end points and every 20' of length. All underground items shall include depth in inch format. These POINTS once collected shall be imported into an AutoCAD DWG geo-referenced base file to be labeled accordingly. The completed AS-Built shall be a Geo-Referenced DWF file and delivered to the owner on a compact disk (CD).
2. Controller charts – Upon completion of "as-built" prepare controller charts; one per controller. Indicate on each chart the area controlled by a remote control valve (using a different color for each zone). This chart shall be reduced to a size that will fit inside of the controller door. The reduction shall be hermetically sealed inside two 2mil pieces of clear plastic.
3. Grounding Certification – Provide ground certification results for each controller and pump panel grounding grid installed. This must be on a licensed electrician letter head indicating location tested (using IR plan symbols), date, time, test method, and testing results.

INSPECTIONS AND COORDINATION MEETINGS REQUIRED – Contractor is required to schedule, perform, and attend the following, and demonstrate to the owner and/or owners representative to their satisfaction, as follows:

1. Pre-construction meeting – Designer and contractor to review entire install process and schedule with owner/general contractor.
2. Mainline Installation inspection(s) – all mainline must be inspected for proper pipe, fittings, depth of coverage, backfill. and installation method
3. Mainline pressure test – All mainline shall be pressure tested according to this design's requirements
4. Flow Meter calibration – All flow meters must be calibrated, provide certified calibration report for all flow meters.
5. USDA Soil Quality Tests for infiltration/texture
6. Coverage and operational test
7. Final inspection
8. Punch list inspection

FINAL ACCEPTANCE

Final acceptance of the irrigation system will be given after the following documents and conditions have been completed and approved. Final payment will not be released until these conditions are satisfied.

1. All above inspections are completed, documented, and approved by owner.
2. Completion and acceptance of 'as-built' drawings.
3. Acceptance of required controller charts and placement inside of controllers.
4. All other submittals have be made to the satisfaction of the owner.

GUARANTEE: The irrigation system shall be guaranteed for a minimum of one calendar year from the time of final acceptance.

MINIMUM RECOMMENDED
IRRIGATION MAINTENANCE PROCEDURES

1. Every irrigation zone should be checked monthly and written reports generated describing the date(s) each zone was inspected, problems identified, date problems repaired, and a list of materials used in the repair. At minimum, these inspections should include the following tasks:

A. Turn on each zone from the controller to verify automatic operation.

B. Check schedules to ensure they are appropriate for the season, plant and soil type, and irrigation method. Consult an I.A. certified auditor for methods used in determining proper irrigation scheduling requirements.

C. Check remote control valve to ensure proper operation.

D. Check setting on pressure regulator to verify proper setting, if present.

E. Check flow control and adjust as needed; ensure valve closure within 10-15 seconds after deactivation by controller.

F. Check for leaks – mainline, lateral lines, valves, heads, etc.

G. Check all heads as follows:

1. Proper set height (top of sprinkler is 1" below mow height)
2. Verify head pop-up height – 6" in turf, 12" in ground cover, and pop-up on riser in shrub beds.
3. Check wiper seal for leaks – if leaking, clean head and re-inspect.
4. If still leaking, replace head with the appropriate head with pressure regulator and built-in check valve.
5. All nozzles checked for proper pattern, clogging, leaks, correct make & model, etc. – replace as needed
6. Check for proper alignment – perfectly vertical; coverage area is correct; minimize over spray onto hardscapes.
7. Riser height raised/lowered to accommodate plant growth patterns and ensure proper coverage.
8. Verify the pop-up riser retracts after operation. If not, repair/replace as needed.

H. Check controller/C.C.U. grounds for resistance (10 ohms or less) once per year. Submit written reports.

I. Check rain shut-off device monthly to ensure it functions properly.

J. Inspect all filters monthly and clean/repair/replace as needed.

K. Inspect backflow devices by utilizing a properly licensed backflow inspector. This should be done annually, at minimum.

L. Inspect all valve boxes to ensure they are in good condition, lids are in place and locked.

M. Check pump stations for proper operation, pressures, filtration, settings, etc. – refer to pump station operations manual.

N. Check and clean intake screens on all suction lines quarterly, at minimum. Clean and/or repair, as needed.

O. Winterize, if applicable, as weather in your area dictates. Follow manufacturer recommendations and blow out all lines and equipment using compressed air. Perform seasonal startup of system as per manufacturer recommendations.

P. Conduct additional inspections, maintenance tasks, etc. that are particular for your site.

Soil Moisture Sensor

1. Place all soil moisture sensor wiring in 1" SCH 40 PVC conduit
2. Soil moisture sensor should be placed in the middle of a spray or drip area as per manufacturer's recommendations.

CRAVEN • THOMPSON AND ASSOCIATES, INC.
ENGINEERS • PLANNERS • SURVEYORS
3563 N.W. 53RD STREET, FORT LAUDERDALE, FLORIDA 33309
FAX: (954) 739-6409 TEL.: (954) 739-6400
FLORIDA LICENSED ENGINEERING, SURVEYING & MAPPING BUSINESS No. 271
FLORIDA LICENSED LANDSCAPE ARCHITECTURE BUSINESS No. C000214

Masuen Consulting LLC
Water Resource Consultants
5079 North Dixie Highway, #323
Oakland Park, FL 33334
Telephone (866) 928-1533
Fax (800) 928-1534

NO.	DATE	ISSUED FOR	BY

DESIGNED JMJ
DRAWN JMJ
CHECKED TKM
PROJ. ENGR. DJS

Douglas J. Schultz LA
No. LA6666937

HAZEN AND SAWYER
Environmental Engineers & Scientists
4000 Hollywood Boulevard, Suite 750N
Hollywood, Florida 33021
Certificate of Authorization Number: 2771

SCALE 1"=20'-0"

CLIENTS PROJECT: –
ENGINEERS PROJECT: 44238-004
CAD REFERENCE: 44238-004BP3-IR4

NORTH MIAMI FLORIDA
CITY OF NORTH MIAMI
PUBLIC WORKS UTILITIES

WINSON WATER TREATMENT PLANT
BID PACKAGE 3: WTP REHABILITATION
IRRIGATION NOTES

DATE: JUNE 2014
SHEET: 335 OF 335
DRAWING: IR-4

PERMITTING